Table of Contents

Read through the installation instructions carefully before installing your Waterous Shift Unit.

NOTE: Instructions subject to change without notice

Waterous Company 125 Hardman Avenue South, South St. Paul, Minnesota 55075 USA (651) 450-5000
www.waterousco.com

Component Identification

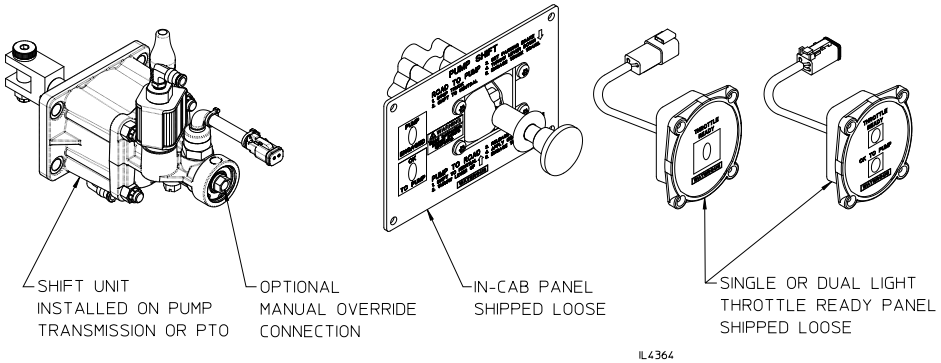

PNEUMATIC OPERATION

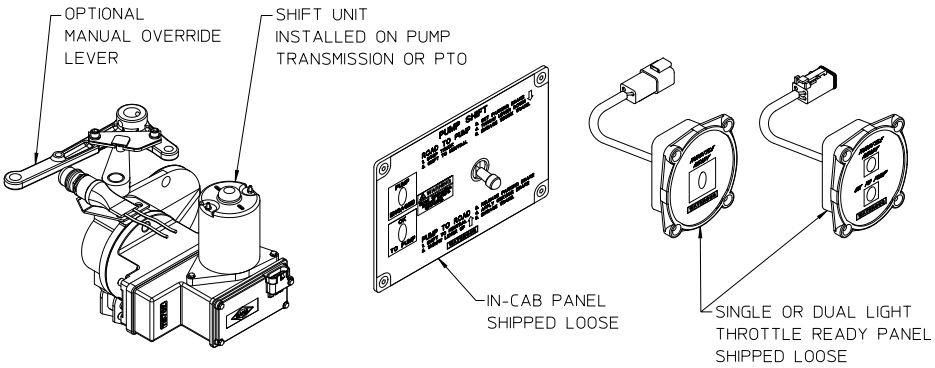

ELECTRIC OPERATION

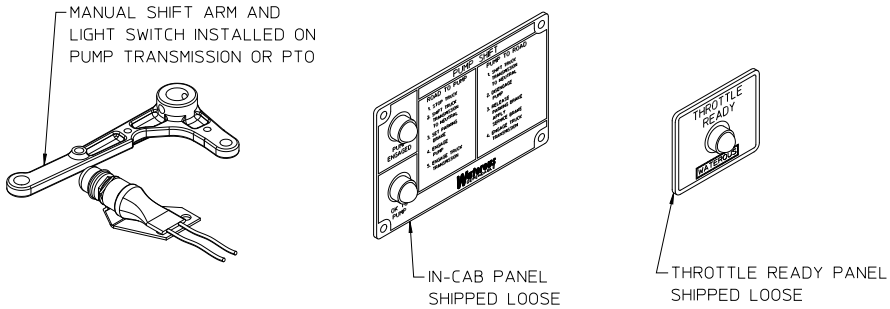

MANUAL OPERATION

Introduction

This instruction covers the installation of shift units on Waterous fire pump transmissions and power take-off (PTO) units. Before proceeding with the installation of the shift unit, read the following instructions carefully.

Safety Information

Read through and communicate safety information to the end user of this Waterous Fire Pump, Transmission or Power Take-Off (PTO) Unit.

OEM Installation Warnings

WARNING

Unexpected Truck Movement. May result in serious personal injury or death.

Fire Pump Applications

Failure to properly install the pump shift control and pump shift indicator system in the apparatus or failure to incorporate in the Pump Operator's Panel Engine Speed Interlock System may result in unexpected truck movement which may result in serious personal injury or death.

Power Take-Off (PTO) Applications

Failure to properly install the PTO shift control and PTO shift indicator system in the apparatus or failure to incorporate in the PTO Operator's Panel Speed Control or Automatic Engine Speed Control system may result in unexpected truck movement which may result in serious personal injury or death.

WARNING

Inability to Pump Water. May result in serious personal injury or death.

Fire Pump Applications

Failure to properly install the pump shift control and pump shift indicator system in the apparatus or failure to incorporate in the Pump Operator's Panel Engine Speed Interlock System may result in the inability to pump water which may result in serious personal injury or death.

Pneumatic Shift Unit Installation

C20 & C21 Series Transmissions / TC20 & TC21 Series PTO's Only

Important Notice

Engine Speed Control Interlock System

Fire Pump Applications:

The pump transmission shift control and pump shift indicator system must be installed in the apparatus in accordance with NFPA 1901 *Standard for Automotive Fire Apparatus* and incorporated in the Pump Operator's Panel Engine Speed Control Interlock System (ESCIS).

Power Take-Off (PTO) Applications:

For apparatus with electronically controlled engines and automatic chassis engines, an interlock system must be provided to prevent advancement of the engine speed at the PTO operator's panel or by an automatic speed control system unless the following conditions are satisfied:

- Parking brake is engaged
- PTO is engaged, and
- Chassis transmission is in PTO gear

⚠ WARNING

Unexpected Truck Movement. May result in serious personal injury or death.

Fire Pump Applications

Failure to properly install the pump shift control and pump shift indicator system in the apparatus or failure to incorporate in the Pump Operator's Panel Engine Speed Interlock System may result in unexpected truck movement which may result in serious personal injury or death.

Power Take-Off (PTO) Applications

Failure to properly install the PTO shift control and PTO shift indicator system in the apparatus or failure to incorporate in the PTO Operator's Panel Speed Control or Automatic Engine Speed Control system may result in unexpected truck movement which may result in serious personal injury or death.

⚠ WARNING

Inability to Pump Water. May result in serious personal injury or death.

Fire Pump Applications

Failure to properly install the pump shift control and pump shift indicator system in the apparatus or failure to incorporate in the Pump Operator's Panel Engine Speed Interlock System may result in the inability to pump water which may result in serious personal injury or death.

1. Route the OEM supplied shift wiring harness to the desired mounting location. Secure the wiring to prevent chaffing or damage due to vibration (see Pages 7 & 8).
2. Install In-cab and “Throttle Ready" panels (see Pages 5 & 6).
3. Connect panel wiring to OEM supplied wiring harness (see Pages 7 & 8).
4. Install air lines between in-cab panel and shift unit.
   a. Requires 80 to 120 psi operating air pressure and a minimum air capacity of 5 cubic inches.
   b. 1/4 in. or 3/8 in. SAE J844 air brake hoses recommended for air lines (see Page 11).
5. If desired, a manual override control can be installed to be used in the event of a loss of air pressure (see Page 12 and 13).

Clearance Required for Maintenance:
3.000 in. / 76.20 mm open space must be provided behind the shift unit to allow for removal of shift unit. See diagram below.

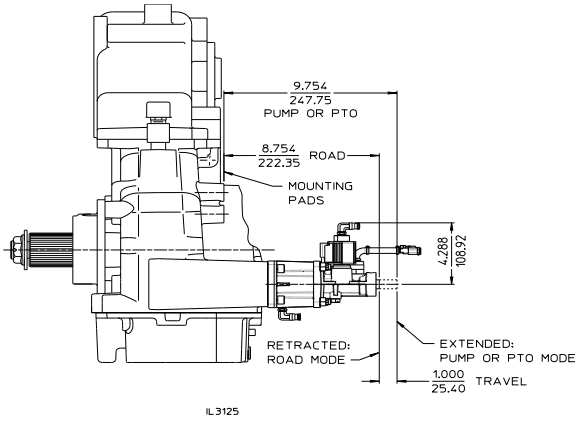

IL3125

Installation – In-Cab Panel

Pneumatic Operation

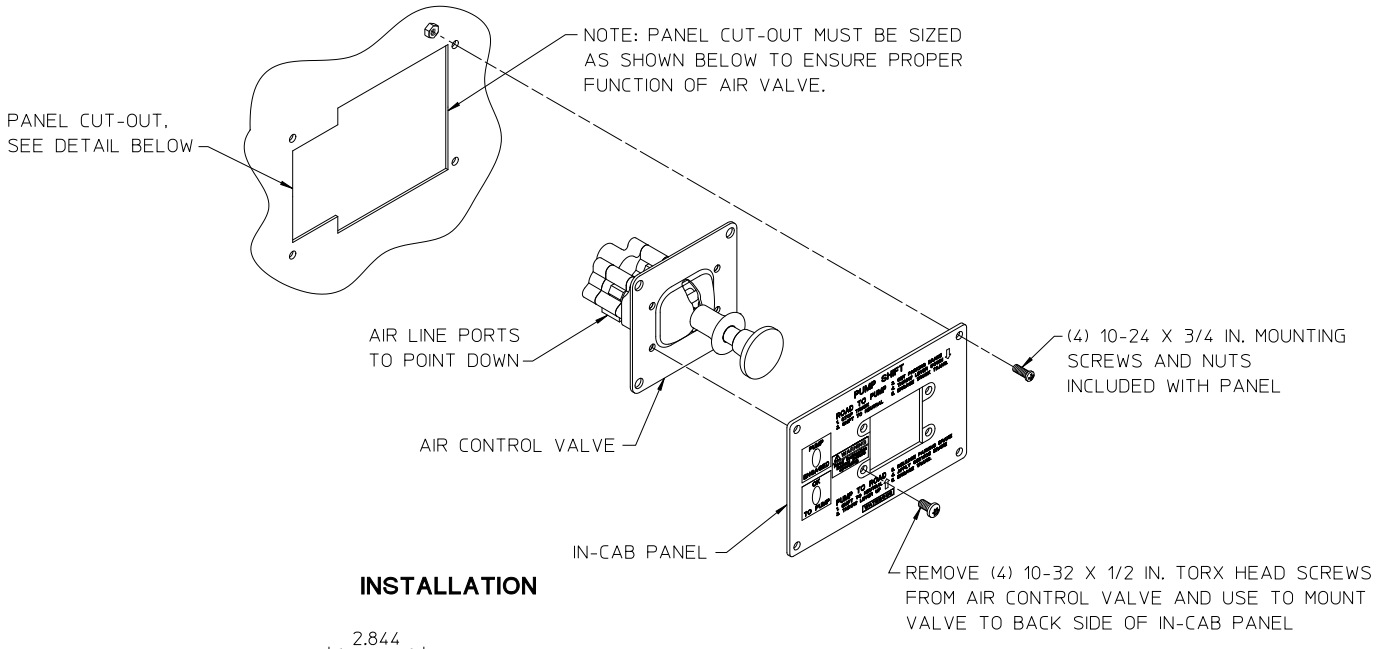

INSTALLATION

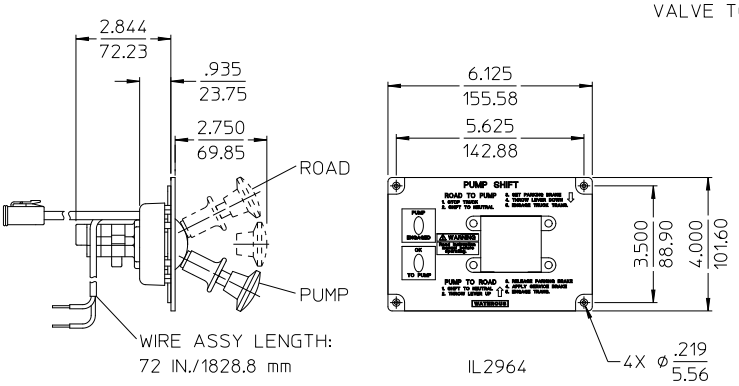

DIMENSIONS

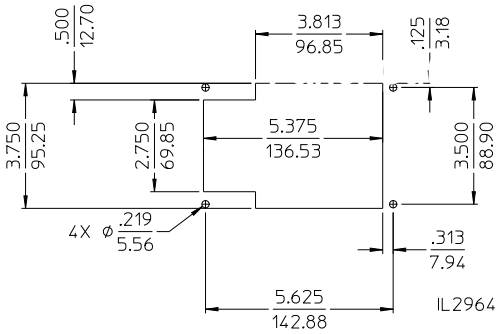

ALL DIMENSIONS SHOWN AS INCH/MILLIMETER

(INCH / MILLIMETER)

PANEL CUT–OUT

Installation – In-Cab Panel

Pneumatic Operation

(On Operator's Panel)

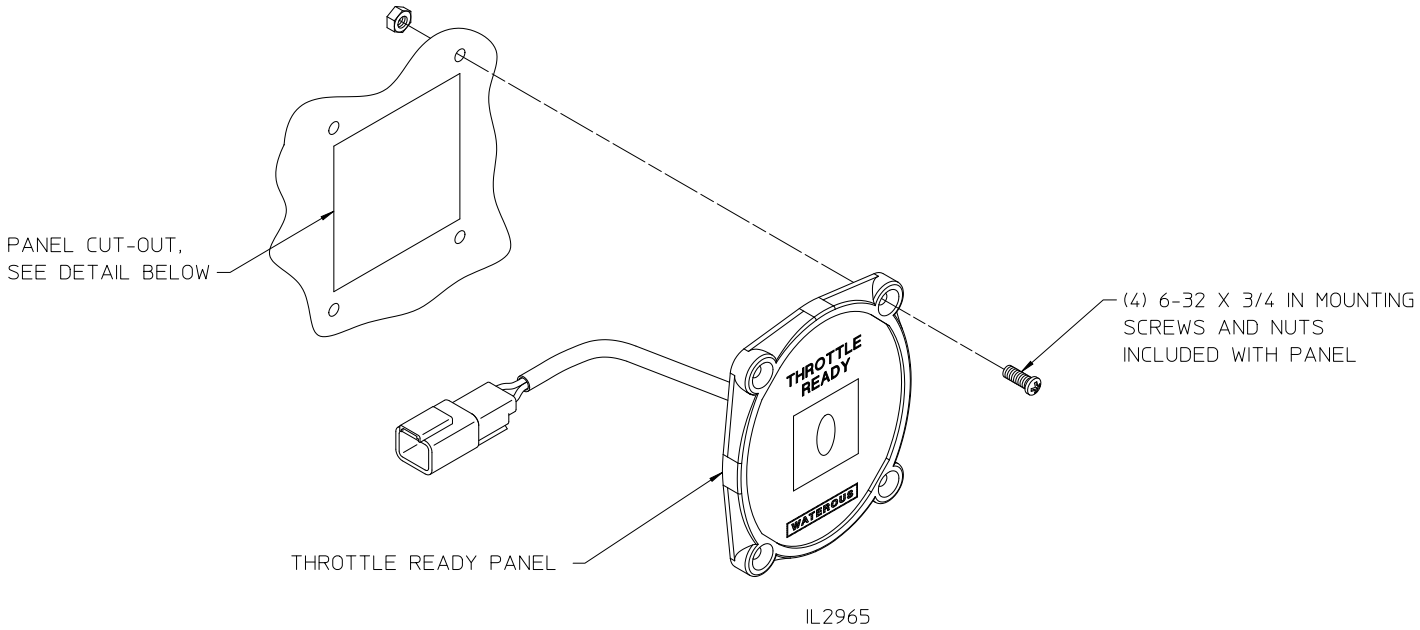

INSTALLATION

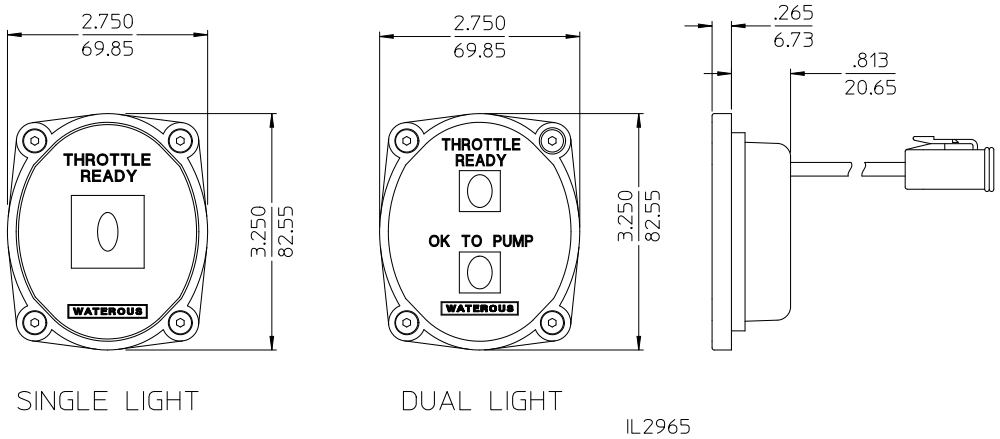

DIMENSIONS

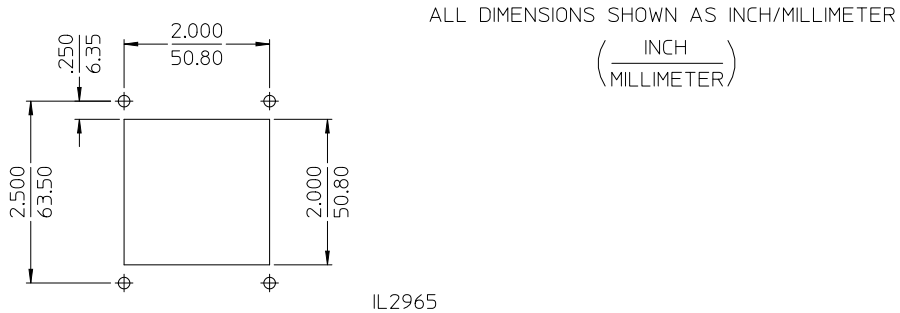

PANEL CUT–OUT

Wiring Connections – Shift Unit and In-Cab Panel

Pneumatic Operation

(See next page for Throttle Ready Panel)

Interlock Solenoid on Shift Unit		
Female Deutsch DT04-2P Receptacle Mates with Male Deutsch Plug DT06-2S		
Wire		Function
Contact	Size	
1	AWG 18	12 or 24 VDC from ECSIS
2	AWG 18	Output to ESCIS

Switch on Shift Unit		
Male Deutsch DT06-2S Plug Mates with Female Deutsch DT04-2P Receptacle		
Wire		Function
Contact	Size	
1	AWG 18	12 or 24 VDC from ECSIS
2	AWG 18	Ground

In-Cab Panel		
Male Deutsch DT06-4S Plug Mates with Female Deutsch DT04-4P Receptacle		
Wire		Function
Contact	Size	
1	AWG 18	To Green LED “Pump or PTO Engaged” (See Note 3)
2	AWG 18	To Green LED “OK to Pump” (See Note 3)
3	AWG18	From 12 or 24 VDC (See Note 2)
4	AWG18	From 12 or 24 VDC (See Note 2)

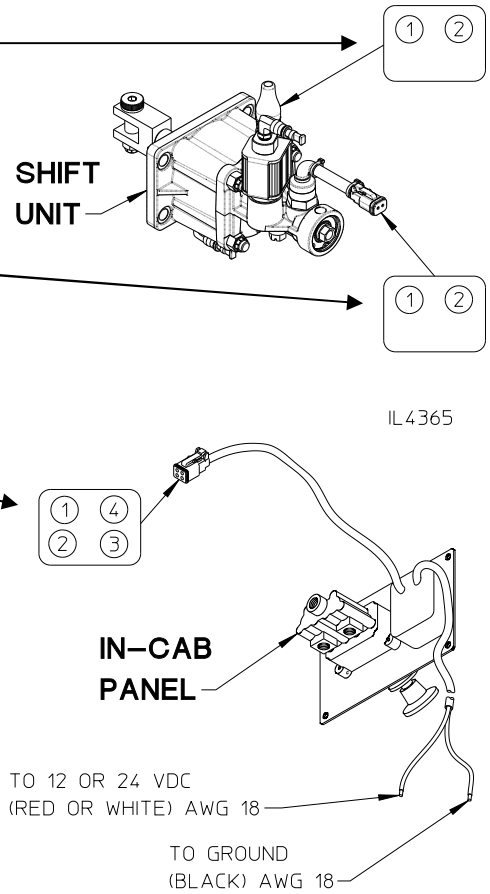

Engine Speed Control Interlock System (ESCIS) Provided by the Truck Manufacturer

Allison 3000 and 4000 Product Family Automatic Transmissions
(See Note 1)

- - - - - - - - - - - - Dashed lines indicate wiring not furnished by Waterous

NOTES:

1. For installations with Allison 3000 and 4000 Product Family Automatic Chassis Transmissions with 4th Generation Controls:
   - Allison announced that transmissions shipped after June 27, 2008 with MY09 software include enhancements that improve engagement and disengagement of split-shaft (pump) transmissions (Reference Allison Watch #373, dated October, 2008).
   - In order to ensure that these enhancements are invoked, the pump/PTO engagement switch provided on the Waterous split-shaft transmission must be incorporated into both the Engine Speed Control Interlock System (ESCIS) control circuit and the **Allison Fire Truck Pump Mode Input Function J1** control circuit or **Allison Pump Mode Input Function AJ1** control circuit for other PTO applications.
2. These 12 or 24 VDC power connections provided for potential optional use by truck manufacturer in ESCIS design.
3. Each LED draws 20mA. Size wires accordingly.

Wiring Connections – Throttle Ready Panel

Pneumatic Operation

Single Light Panel		
Female Deutsch DT04-2P Receptacle Mates with Male Deutsch DT06-2S Plug		
Wire		Function
Contact	Size	
1	AWG 18	To Green LED “Throttle Ready” (See Note 2)
2	AWG 18	Ground

Dual Light Panel		
Male Deutsch DT06-4S Plug Mates with Female Deutsch DT04-4P Receptacle		
Wire		Function
Contact	Size	
1	AWG 18	To Green LED “Throttle Ready” (See Note 3)
2	AWG 18	To Green LED “OK to Pump” (See Note 3)
3	AWG18	Ground
4	AWG18	Not Used

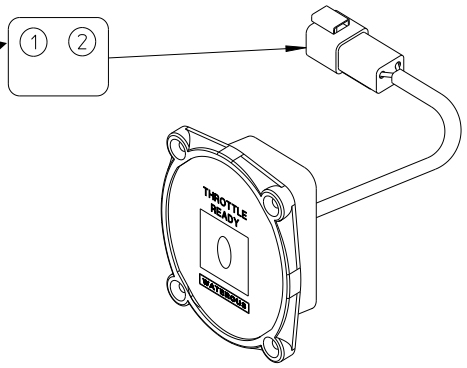

SINGLE LIGHT PANEL

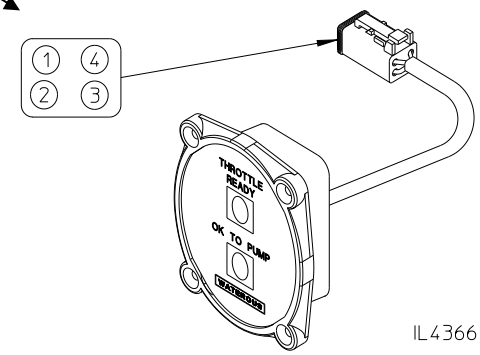

DUAL LIGHT PANEL

Engine Speed Control Interlock System (ESCIS) Provided by the Truck Manufacturer

Allison 3000 and 4000 Product Family Automatic Transmissions
(See Note 1)

- - - - - - - - - - - - Dashed lines indicate wiring not furnished by Waterous

NOTES:

1. For installations with Allison 3000 and 4000 Product Family Automatic Chassis Transmissions with 4th Generation Controls:
   - Allison announced that transmissions shipped after June 27, 2008 with MY09 software include enhancements that improve engagement and disengagement of split-shaft (pump) transmissions (Reference Allison Watch #373, dated October, 2008).
   - In order to ensure that these enhancements are invoked, the pump/PTO engagement switch provided on the Waterous split-shaft transmission must be incorporated into both the Engine Speed Control Interlock System (ESCIS) control circuit and the **Allison Fire Truck Pump Mode Input Function J1** control circuit or **Allison Pump Mode Input Function AJ1** control circuit for other PTO applications.
2. Each LED draws 20mA. Size wires accordingly.

Wiring Schematic – Single Light Operator's Panel

Pneumatic Operation

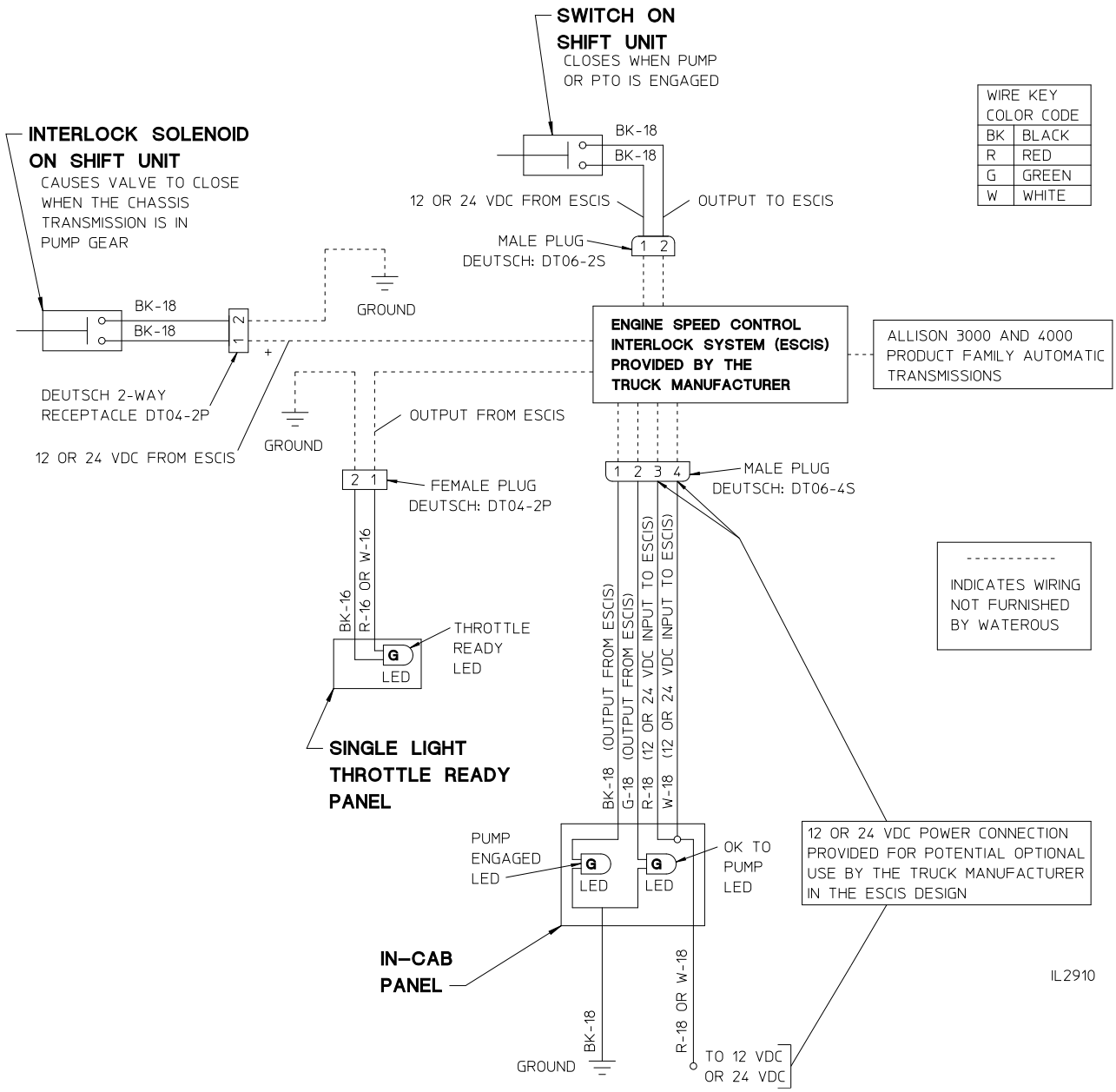

NOTES:

1. Number following color code is the wire size (AWG.) (I.E. BK-16 is a black 16 AWG wire).
2. ESCIS - Engine Speed Control Interlock System.

Wiring Schematic – Dual Light Operator's Panel

Pneumatic Operation

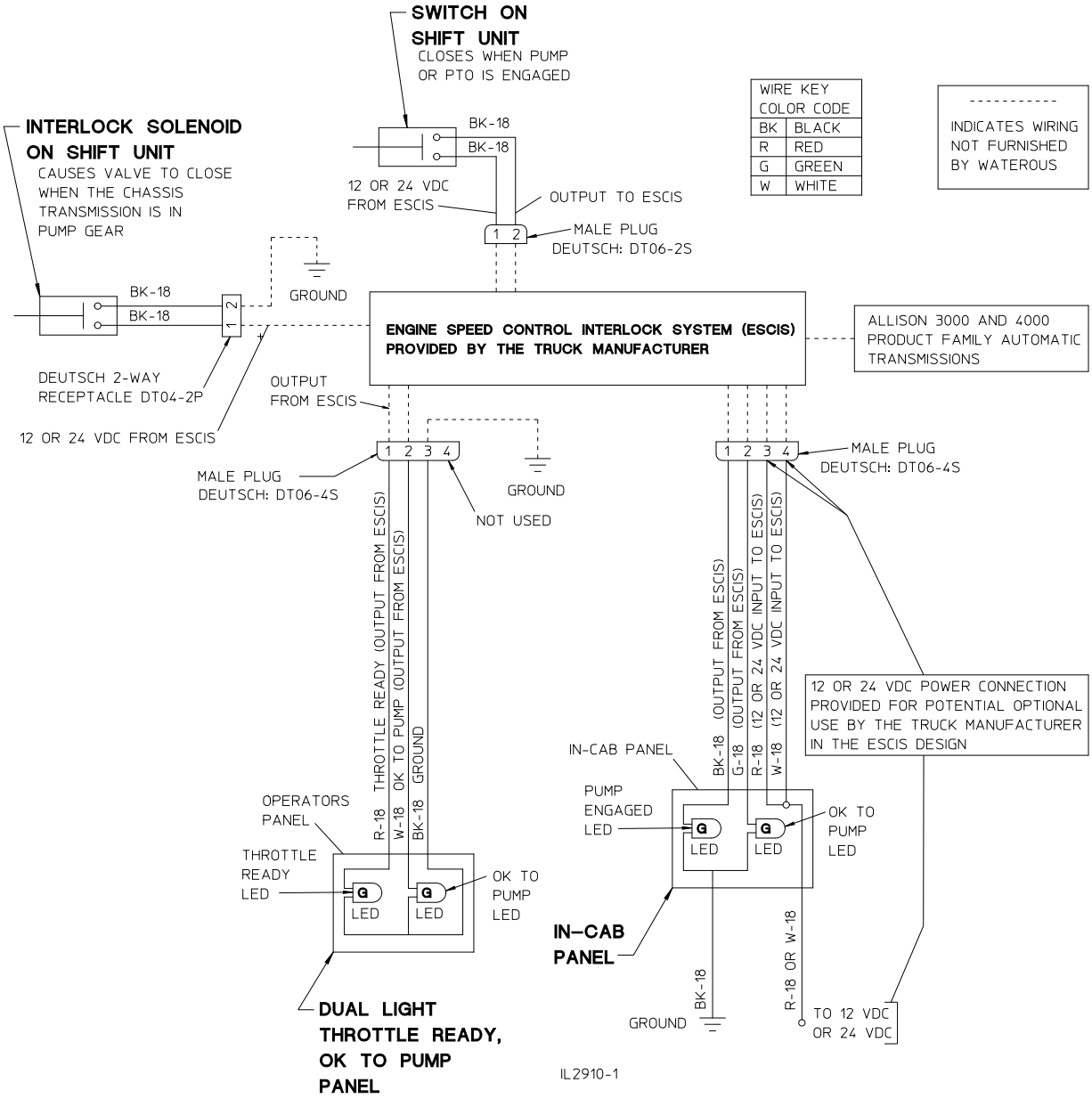

NOTES:

1. Number following color code is the wire size (AWG.) (I.E. BK-16 is a black 16 AWG wire).
2. ESCIS - Engine Speed Control Interlock System.

Air Line Connections – Pneumatic Operation

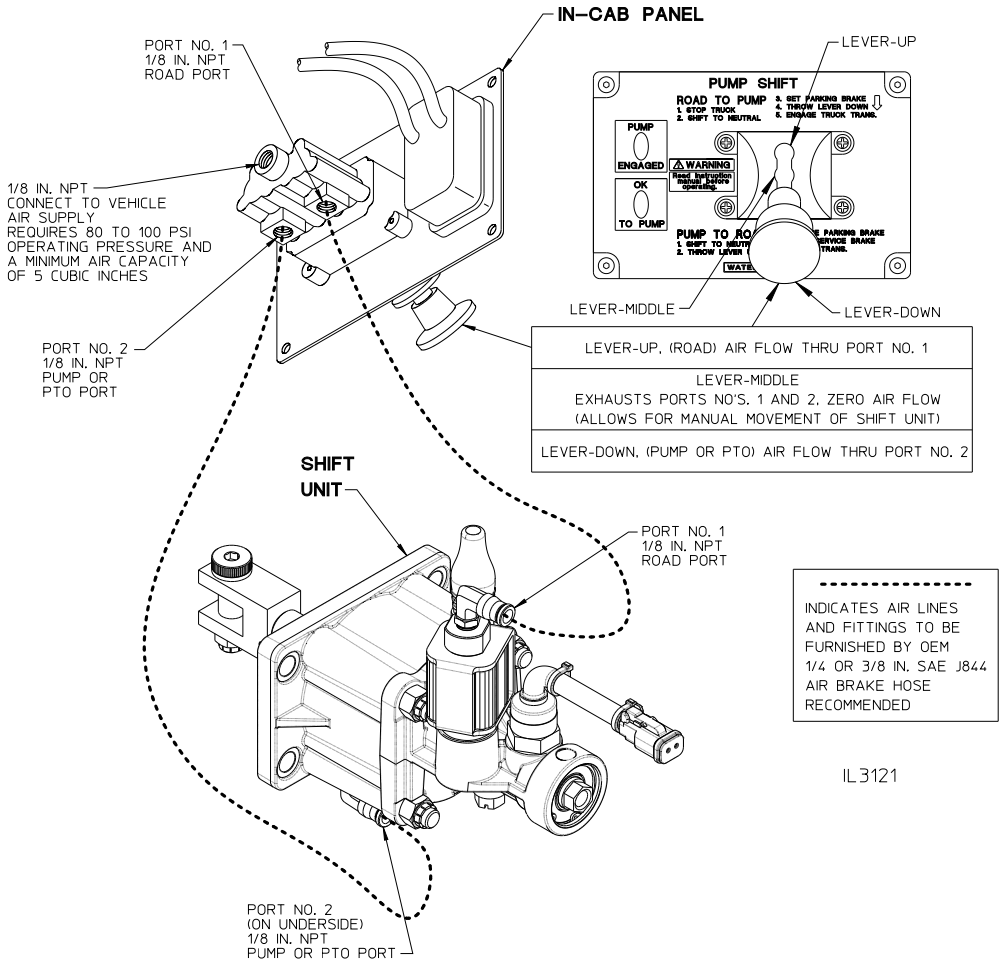

Manual Override – Pneumatic Operation

(Use is Optional)

Optional Manual Override

If desired, manual override controls can be installed so that in the event of a malfunction, the pump transmission or PTO can be operated from the cab, control panel or other location.

To override the pneumatic shift, the air valve must be placed in the center position to exhaust the air pressure. After air pressure is exhausted, the transmission can be manually shifted with the use of a rod or cable.

CAUTION
The use of a manual override control must maintain full functional capabilities of the pump or PTO shaft indicator system and the pump or PTO Operator's Panel Engine Speed Control Interlock System (ESCIS).

Connection of Override Cable or Linkage

CAUTION
Provisions should be made to lock linkage or cable in PUMP/PTO mode once shift is completed manually.
Install linkage or cable so that a maximum force applied to the shift unit will not exceed 100 lbs.
During normal shift operation with air pressure, the override rod or cable will move. The drag on the rod or cable should be minimized, 10 lb max. drag is recommended.

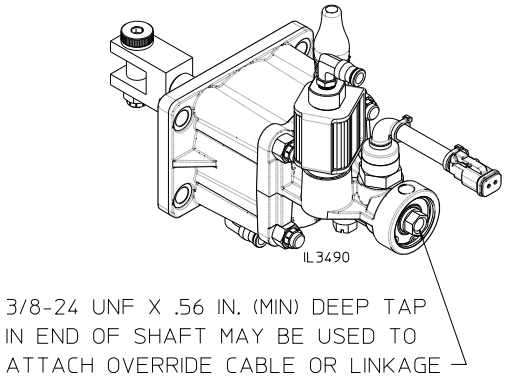

Override Bracket Connection Points

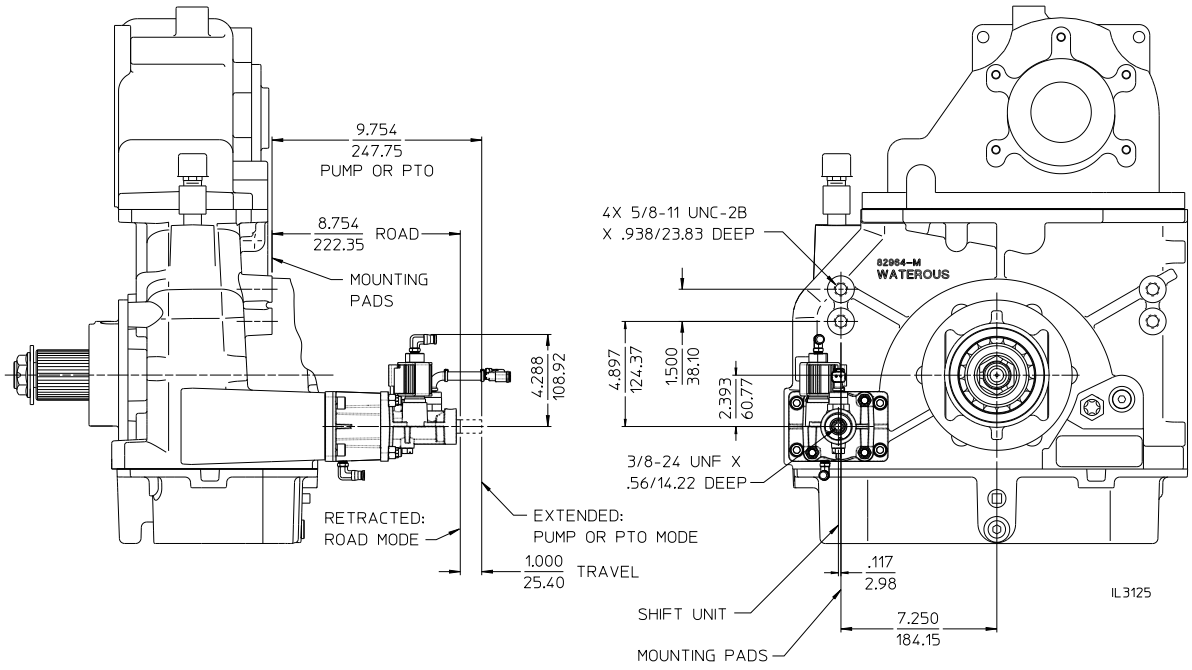

Manual Override – Pneumatic Operation

(Use is Optional)

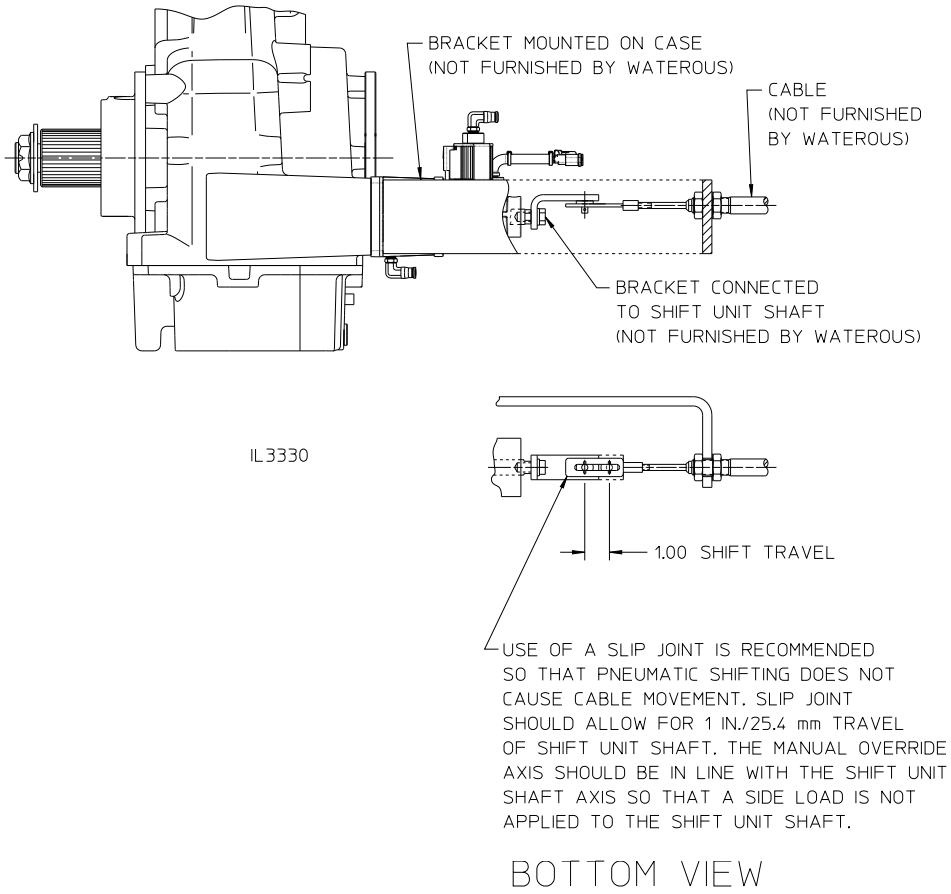

WB Series Transmissions and TML, TMR Series PTO's Only

Important Notice

Engine Speed Control Interlock System

Fire Pump Applications:

The pump transmission shift control and pump shift indicator system must be installed in the apparatus in accordance with NFPA 1901 *Standard for Automotive Fire Apparatus* and incorporated in the Pump Operator's Panel Engine Speed Control Interlock System (ESCIS).

Power Take-Off (PTO) Applications:

For apparatus with electronically controlled engines and automatic chassis engines, an interlock system must be provided to prevent advancement of the engine speed at the PTO operator's panel or by an automatic speed control system unless the following conditions are satisfied:

- Parking brake is engaged
- PTO is engaged, and
- Chassis transmission is in PTO gear

⚠ WARNING

Unexpected Truck Movement. May result in serious personal injury or death.

Fire Pump Applications

Failure to properly install the pump shift control and pump shift indicator system in the apparatus or failure to incorporate in the Pump Operator's Panel Engine Speed Interlock System may result in unexpected truck movement which may result in serious personal injury or death.

Power Take-Off (PTO) Applications

Failure to properly install the PTO shift control and PTO shift indicator system in the apparatus or failure to incorporate in the PTO Operator's Panel Speed Control or Automatic Engine Speed Control system may result in unexpected truck movement which may result in serious personal injury or death.

⚠ WARNING

Inability to Pump Water. May result in serious personal injury or death.

Fire Pump Applications

Failure to properly install the pump shift control and pump shift indicator system in the apparatus or failure to incorporate in the Pump Operator's Panel Engine Speed Interlock System may result in the inability to pump water which may result in serious personal injury or death.

1. Route the shift wiring harness to the desired mounting location. Secure the wiring to prevent chaffing or damage due to vibration (see Pages 17 & 18).
2. Install In-Cab Panel and Throttle Ready Panel (see Pages 15 & 16).
3. If desired, a manual override control can be installed to be used in the event of a malfunction, the pump transmission can be operated from the cab, control panel or other location (see Page 21).

Installation – In-Cab Panel

(Electric Operation)

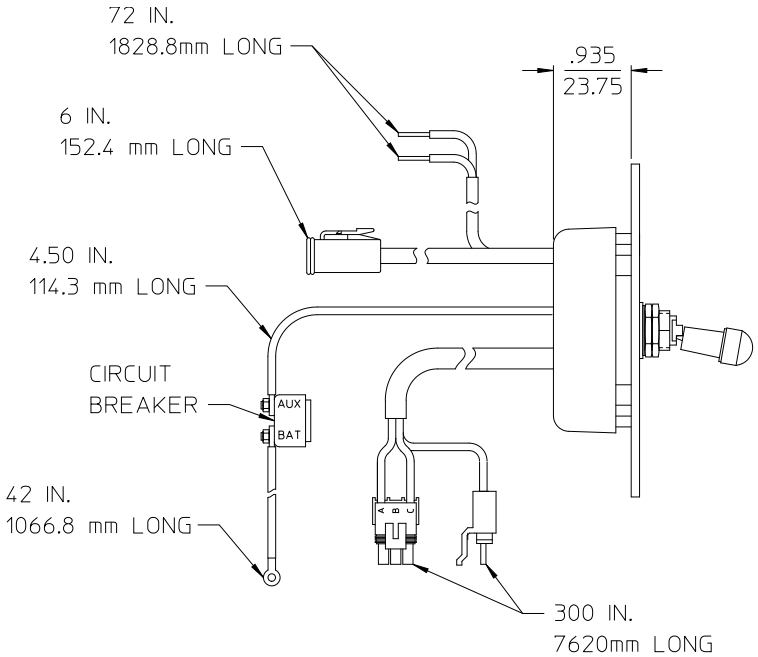

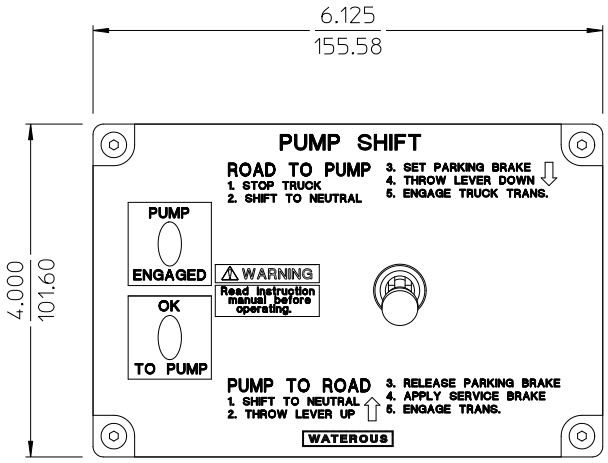

DIMENSIONS

IL4369

ALL DIMENSIONS SHOWN AS INCH/MILLIMETER

(INCH / MILLIMETER)

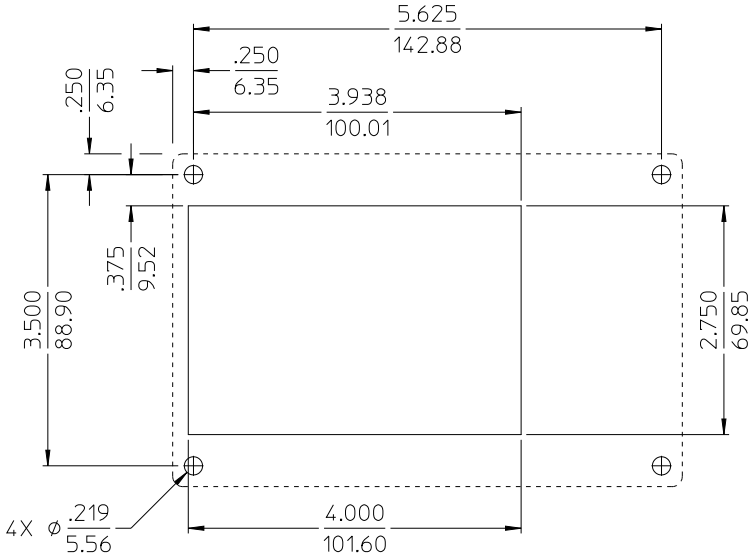

PANEL CUT–OUT

Installation – Throttle Ready Panel

Electric Operation

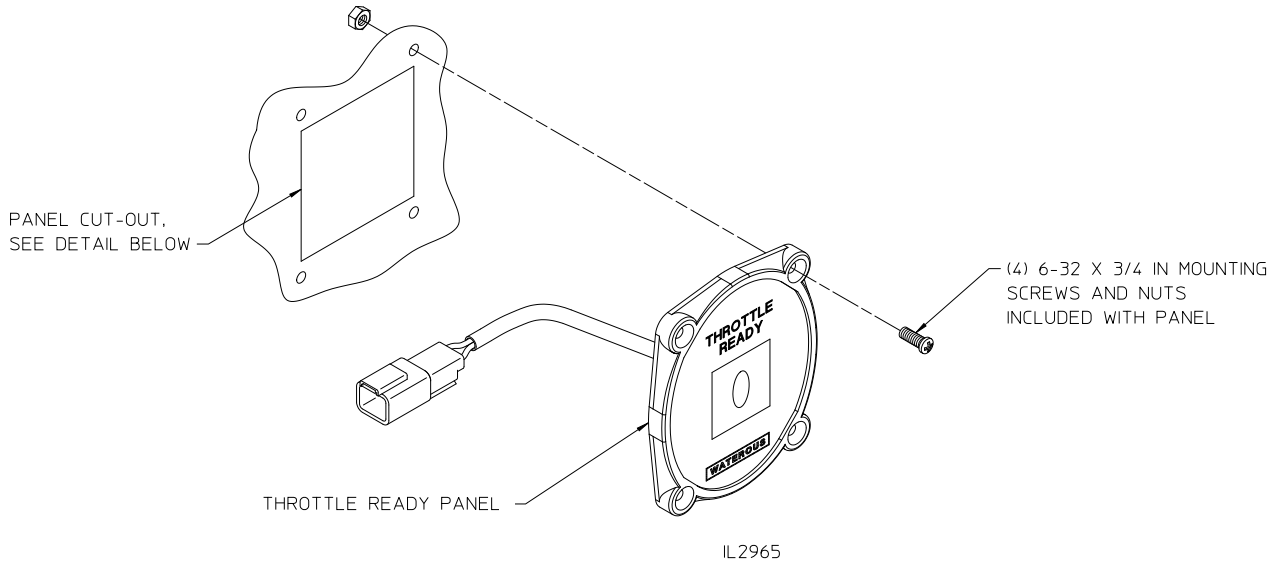

INSTALLATION

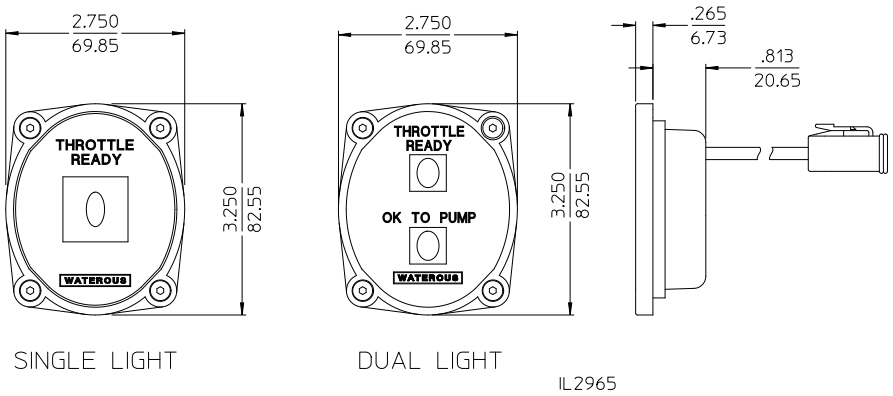

DIMENSIONS

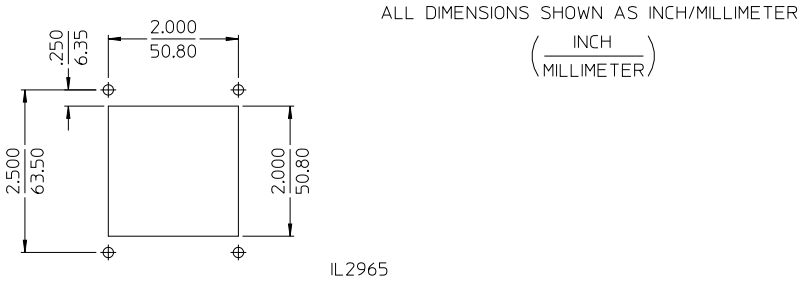

PANEL CUT–OUT

Wiring Connections – Throttle Ready Panel

Electric Operation

Switch on Shift Unit			
Male Deutsch DT06-2S Plug Mates with Female Deutsch DT04-2P Receptacle			
	Wire		Function
Contact	Size	Color	
1	AWG 18	White	12 or 24 VDC from ESCIS
2	AWG 18	Black	Output to ESCIS

In-Cab Panel		
Male Deutsch DT06-4S Plug Mates with Female Deutsch DT04-4P Receptacle		
Wire		Function
Contact	Size	
1	AWG 18	To Green LED “Pump or PTO Engaged” (See Note 3)
2	AWG 18	To Green LED “OK to Pump” (See Note 3)
3	AWG18	From 12 or 24 VDC (See Note 2)
4	AWG18	From 12 or 24 VDC (See Note 2)

Engine Speed Control Interlock System (ESCIS) Provided by the Truck Manufacturer

Allison 3000 and 4000 Product Family Automatic Transmissions
(See Note 1)

- - - - - - - - - - - - Dashed lines indicate wiring not furnished by Waterous

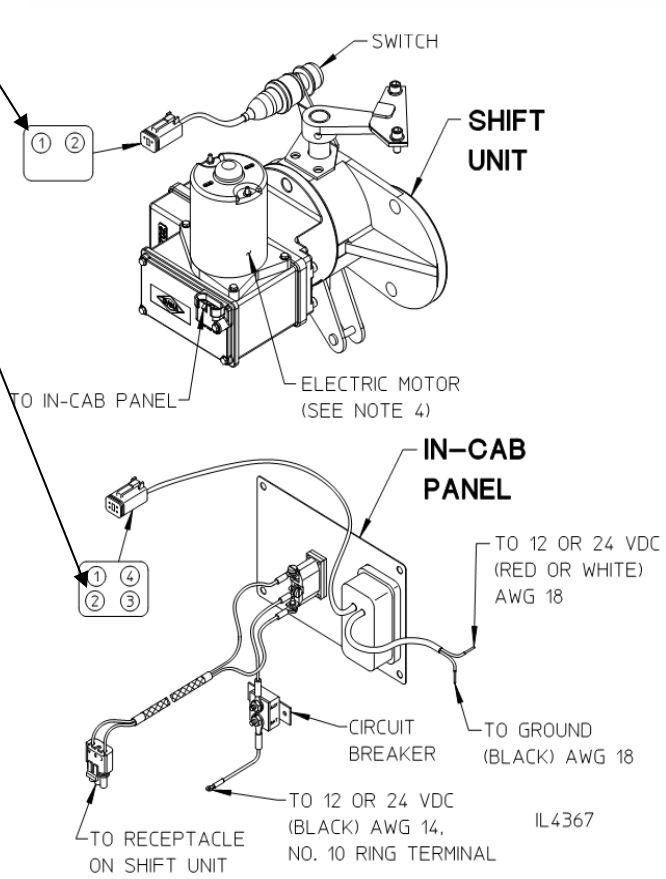

NOTES:

1. For installations with Allison 3000 and 4000 Product Family Automatic Chassis Transmissions with 4th Generation Controls:
   - Allison announced that transmissions shipped after June 27, 2008 with MY09 software include enhancements that improve engagement and disengagement of split-shaft (pump) transmissions (Reference Allison Watch #373, dated October, 2008).
   - In order to ensure that these enhancements are invoked, the pump/PTO engagement switch provided on the Waterous split-shaft transmission must be incorporated into both the Engine Speed Control Interlock System (ESCIS) control circuit and the **Allison Fire Truck Pump Mode Input Function J1** control circuit or **Allison Pump Mode Input Function AJ1** control circuit for other PTO applications.
2. These 12 or 24 VDC power connections provided optional use by truck manufacturer in ESCIS design.
3. Each LED draws 20mA. Size wires accordingly.
4. Current draw for the shift unit electric motor is 20 amps when the shift cycle is initiated (this lasts for approximately one second) and decreases to 10 amps for the remainder of the cycle

Wiring Connections – Throttle Ready Panel

Electric Operation

Single Light Panel		
Female Deutsch DT04-2P Receptacle Mates with Male Deutsch DT06-2S Plug		
Wire		Function
Contact	Size	
1	AWG 18	To Green LED “Throttle Ready” (See Note 2)
2	AWG 18	Ground

Dual Light Panel		
Male Deutsch DT06-4S Plug Mates with Female Deutsch DT04-4P Receptacle		
Wire		Function
Contact	Size	
1	AWG 18	To Green LED “Throttle Ready” (See Note 2)
2	AWG 18	To Green LED “OK to Pump” (See Note 2)
3	AWG18	Ground
4	AWG18	Not Used

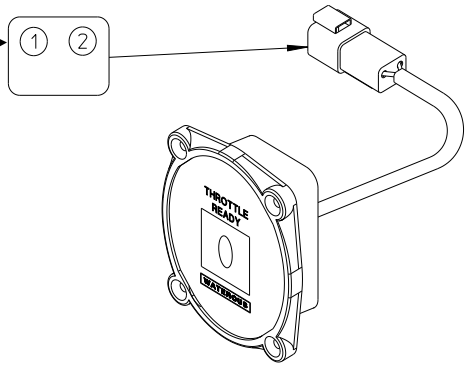

SINGLE LIGHT PANEL

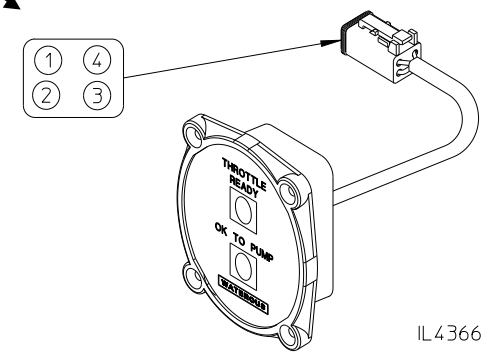

DUAL LIGHT PANEL

Engine Speed Control Interlock System (ESCIS) Provided by the Truck Manufacturer

Allison 3000 and 4000 Product Family Automatic Transmissions
(See Note 1)

- - - - - - - - - - - - Dashed lines indicate wiring not furnished by Waterous

NOTES:

1. For installations with Allison 3000 and 4000 Product Family Automatic Chassis Transmissions with 4th Generation Controls:
   - Allison announced that transmissions shipped after June 27, 2008 with MY09 software include enhancements that improve engagement and disengagement of split-shaft (pump) transmissions (Reference Allison Watch #373, dated October, 2008).
   - In order to ensure that these enhancements are invoked, the pump/PTO engagement switch provided on the Waterous split-shaft transmission must be incorporated into both the Engine Speed Control Interlock System (ESCIS) control circuit and the **Allison Fire Truck Pump Mode Input Function J1** control circuit or **Allison Pump Mode Input Function AJ1** control circuit for other PTO applications.
2. Each LED draws 20mA. Size wires accordingly.

Wiring Schematic – Single Light Operator's Panel

Electric Operation

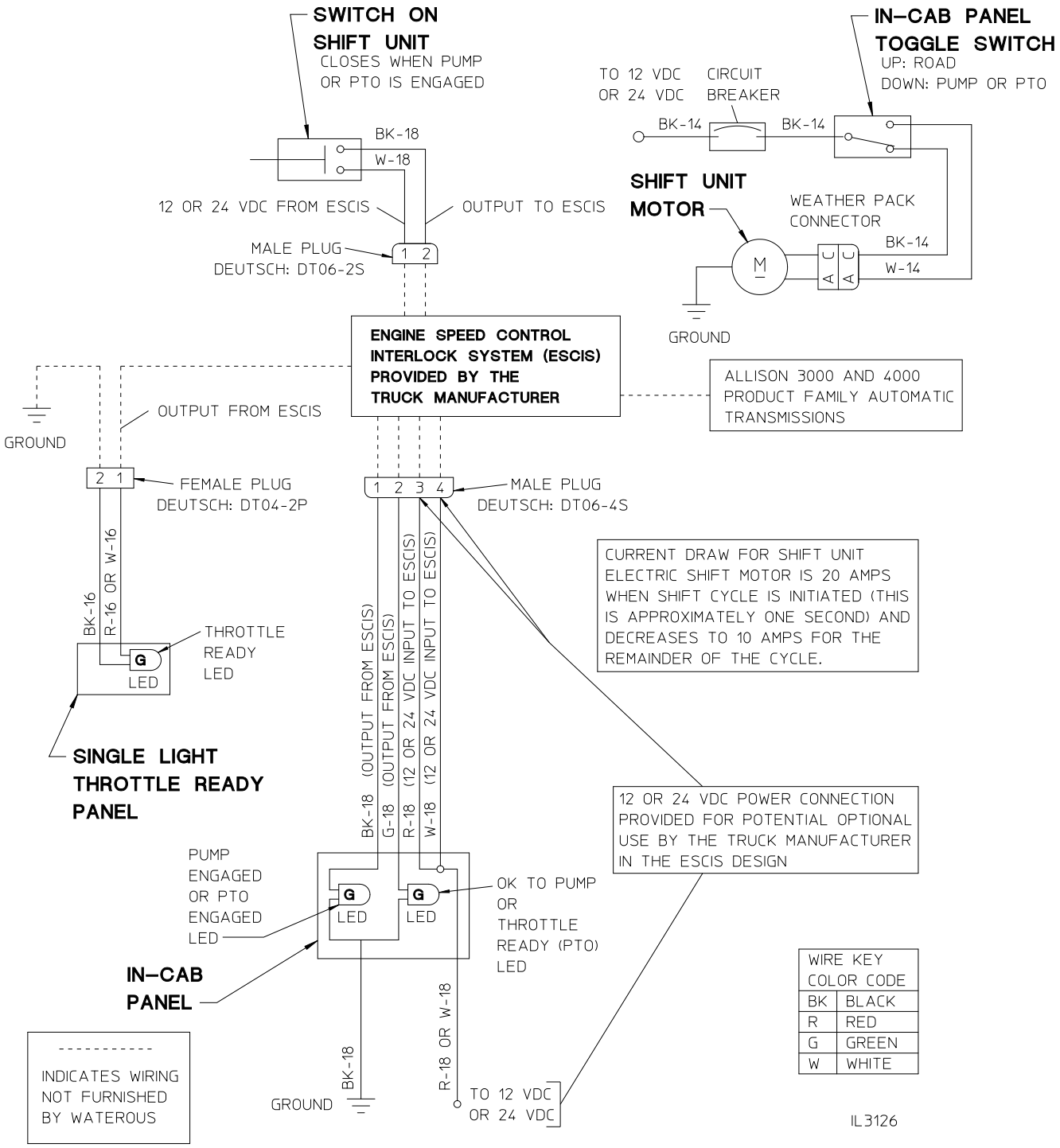

NOTES:

1. Number following color code is the wire size (AWG.) (I.E. BK-16 is a black 16 AWG wire).
2. ESCIS - Engine Speed Control Interlock System.

Wiring Schematic – Dual Light Operator's Panel

Electric Operation

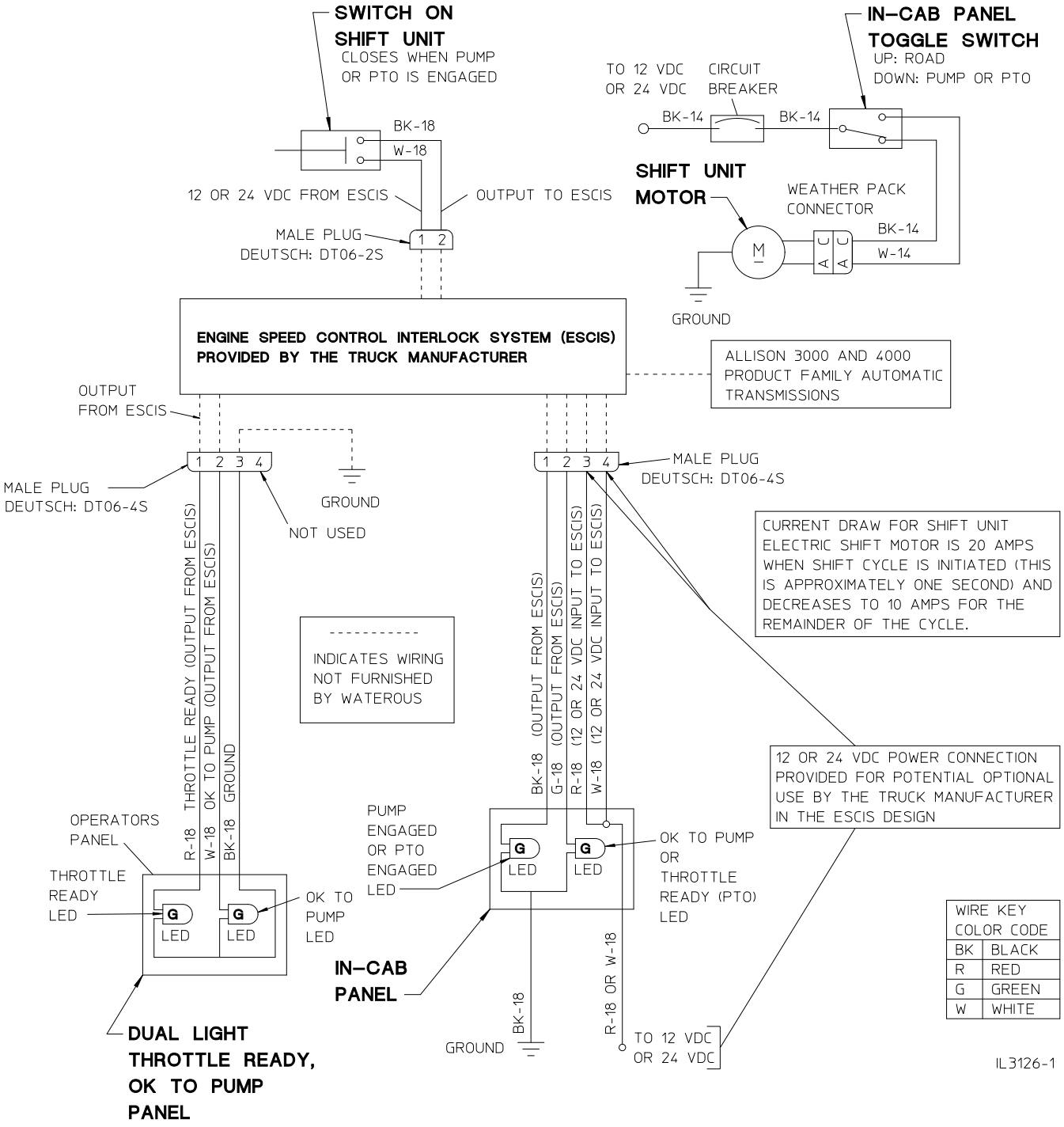

NOTES:

1. Number following color code is the wire size (AWG.) (I.E. BK-16 is a black 16 AWG wire).
2. ESCIS - Engine Speed Control Interlock System.

Optional Manual Override – Electric Shift

NOTE: The use of a manual override control must maintain full functional capability of the pump shift indicator system and the Pump Operator's Panel Engine Speed Control Interlock System (ESCIS).

Two rods are required to override the shift unit: one to disengage the shift unit cam and the other to operate the shift arm on the transmission. Note that the instructions below cover the routing of the control rods to the control panel on the left side of the apparatus.

1. Determine locations for the control rod handles on the control panel or other location. Be sure no obstructions interfere with the rod operation. Drill holes and install rubber grommets (if desired).
2. Install the manual shift rod between the control panel and the shift arm on the transmission. Connect the rod to the shift arm with 3/8 inch ball joint or similar device which will permit the rod to swivel freely on the arm.

   NOTE: The rod will move during electric shift operation; therefore, reduce drag on the rod.
3. The cams underneath the electric shift unit swivel with the vertical shift shaft whenever the electric shift is operated. The cams must be rotated in a vertical plane in order to disengage the electric actuator. One of the easiest ways of attaching the rod to the cam is to use a 3/8 inch eyebolt or rod end; since the diameter of the clevis pin is 1/4 inch, the eyebolt or rod end will be enough oversize to permit the cams to swivel horizontally with the shaft when the shift is operated.

   NOTE: Install override linkage so that the maximum force applied to the long arm of the lever will not exceed 300 lbs / 136 kg.

Hole Size for Manual Override Linkage

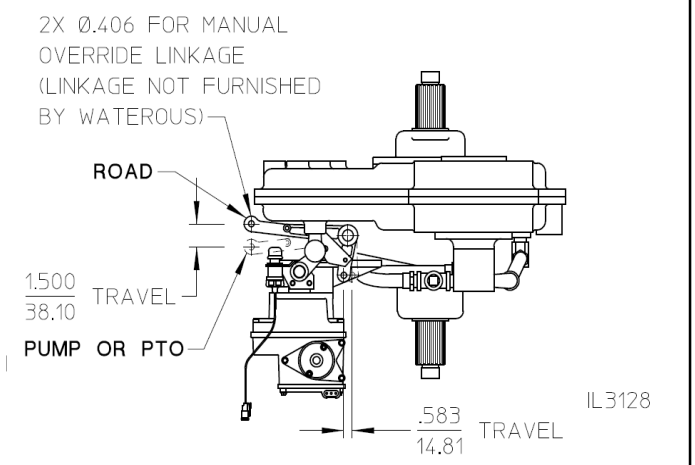

Shift Unit Disengagement Cam

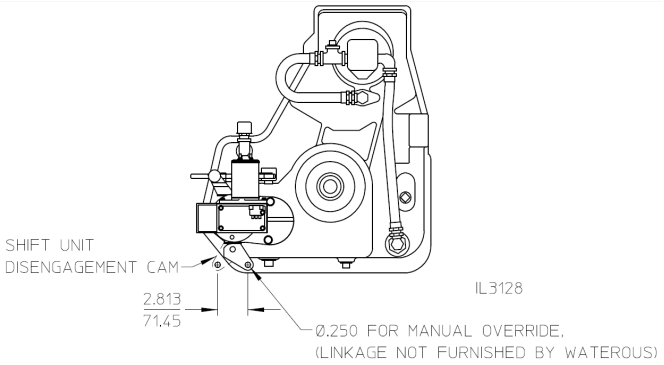

Manual Override

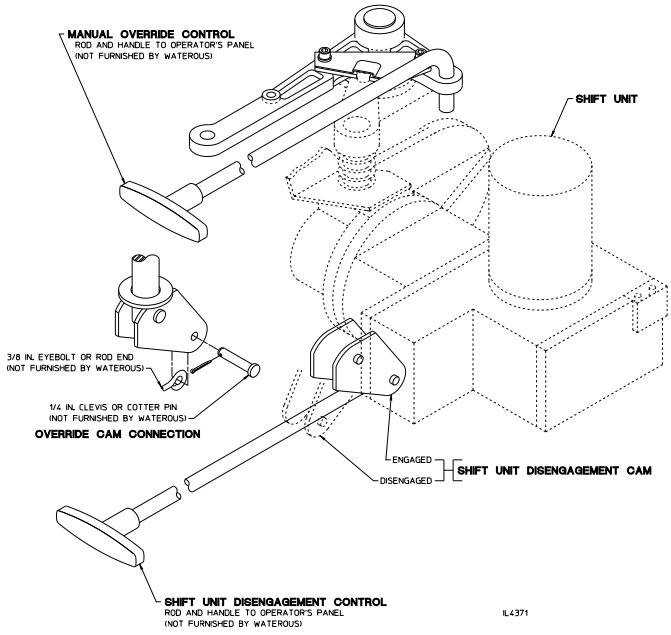

Important Notice

Engine Speed Control Interlock System

Fire Pump Applications:

The pump transmission shift control and pump shift indicator system must be installed in the apparatus in accordance with NFPA 1901 *Standard for Automotive Fire Apparatus* and incorporated in the Pump Operator's Panel Engine Speed Control Interlock System (ESCIS).

Power Take-Off (PTO) Applications:

For apparatus with electronically controlled engines and automatic chassis engines, an interlock system must be provided to prevent advancement of the engine speed at the PTO operator's panel or by an automatic speed control system unless the following conditions are satisfied:

- Parking brake is engaged
- PTO is engaged, and
- Chassis transmission is in PTO gear

⚠ WARNING

Unexpected Truck Movement. May result in serious personal injury or death.

Fire Pump Applications

Failure to properly install the pump shift control and pump shift indicator system in the apparatus or failure to incorporate in the Pump Operator's Panel Engine Speed Interlock System may result in unexpected truck movement which may result in serious personal injury or death.

Power Take-Off (PTO) Applications

Failure to properly install the PTO shift control and PTO shift indicator system in the apparatus or failure to incorporate in the PTO Operator's Panel Speed Control or Automatic Engine Speed Control system may result in unexpected truck movement which may result in serious personal injury or death.

⚠ WARNING

Inability to Pump Water. May result in serious personal injury or death.

Fire Pump Applications

Failure to properly install the pump shift control and pump shift indicator system in the apparatus or failure to incorporate in the Pump Operator's Panel Engine Speed Interlock System may result in the inability to pump water which may result in serious personal injury or death.

1. Install a suitable linkage which will permit operation from the cab, control panel or other location (see Page 26).
   a. Determine locations for the control rod handles on the panel. Drill holes and install grommets (if desired). Ensure that no obstructions interfere with rod operation.
   b. Install shift linkage so that the maximum force applied to the long arm of the shift lever will not exceed 300 lbs / 136 kg.
   c. Connect the rod to the shift arm with a 3/8 in. ball joint or similar device which will permit the rod to swivel freely on the arm.
2. Route the shift wiring harness to the desired mounting location. Secure the wiring to prevent chaffing or damage due to vibration.
3. Install In-Cab and Throttle Ready panels (see Pages 22 and 23).
4. Connect panel wiring to OEM supplied wiring (see Page 24).

Installation – In Cab and Throttle Ready Panels

Manual Operation

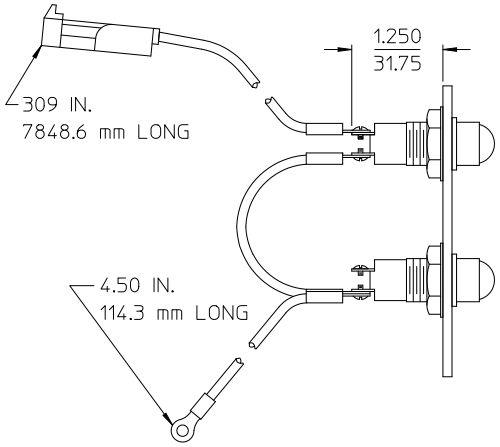

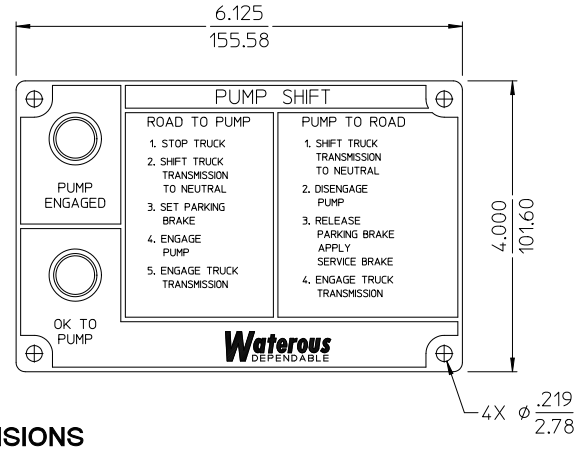

DIMENSIONS

ALL DIMENSIONS SHOWN AS INCH/MILLIMETER

(INCH / MILLIMETER)

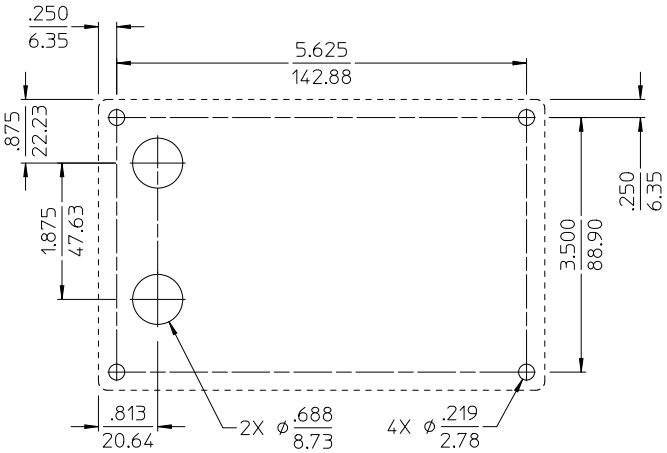

PANEL CUT–OUT

IN–CAB PANEL

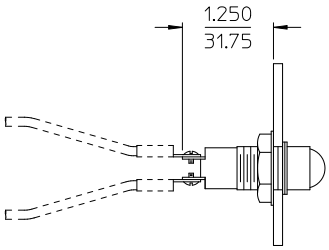

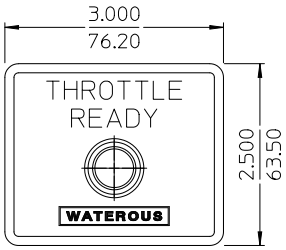

DIMENSIONS

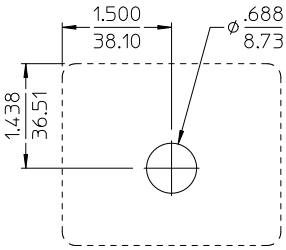

IL4371

PANEL CUT–OUT

THROTTLE READY PANEL

Wiring Connections – Manual Operation

In-Cab Panel		
Terminal		Function
No.	Size	
1	No. 4 ring	Pump Engaged
2	No. 4 ring	OK to Pump

Throttle Ready Panel		
Terminal		Function
No.	Size	
1	No. 4 ring	Pump Engaged
2	No. 4 ring	Ground

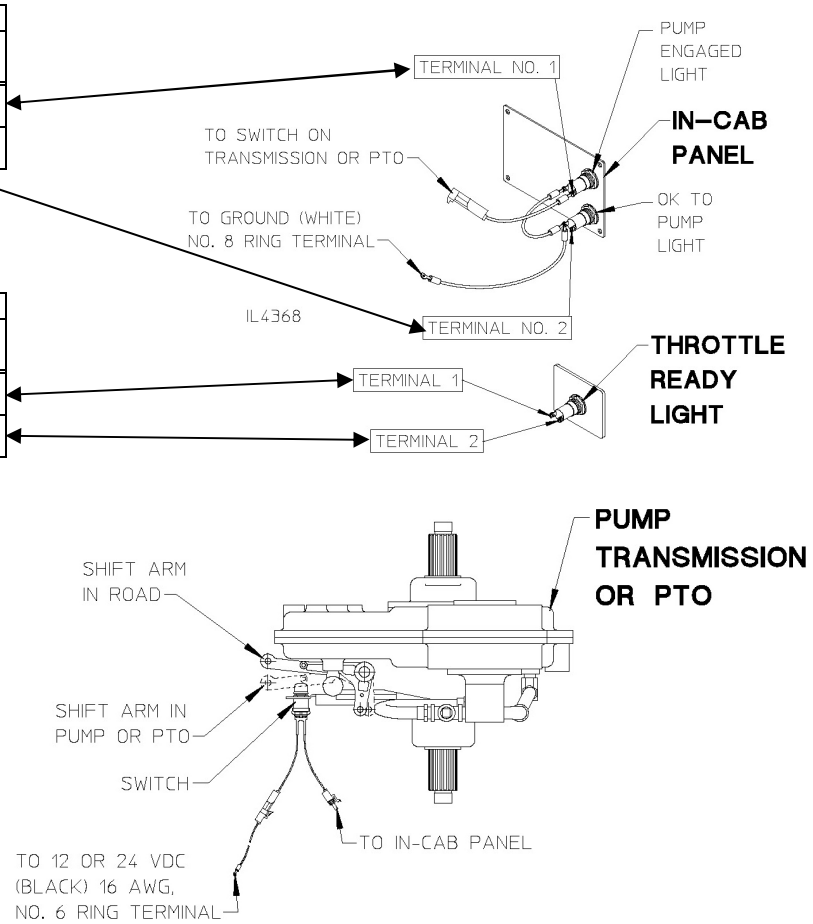

Engine Speed Control Interlock System (ECSIS) Provided by the Truck Manufacturer

Allison 3000 and 4000 Product Family Automatic Transmissions
(See Note 1)

NOTES:

3. For installations with Allison 3000 and 4000 Product Family Automatic Chassis Transmissions with 4th Generation Controls:
   - Allison announced that transmissions shipped after June 27, 2008 with MY09 software include enhancements that improve engagement and disengagement of split-shaft (pump) transmissions (Reference Allison Watch #373, dated October, 2008).
   - In order to ensure that these enhancements are invoked, the pump/PTO engagement switch provided on the Waterous split-shaft transmission must be incorporated into both the Engine Speed Control Interlock System (ESCIS) control circuit and the **Allison Fire Truck Pump Mode Input Function J1** control circuit or **Allison Pump Mode Input Function AJ1** control circuit for other PTO applications.

Wiring Schematic – Manual Operation

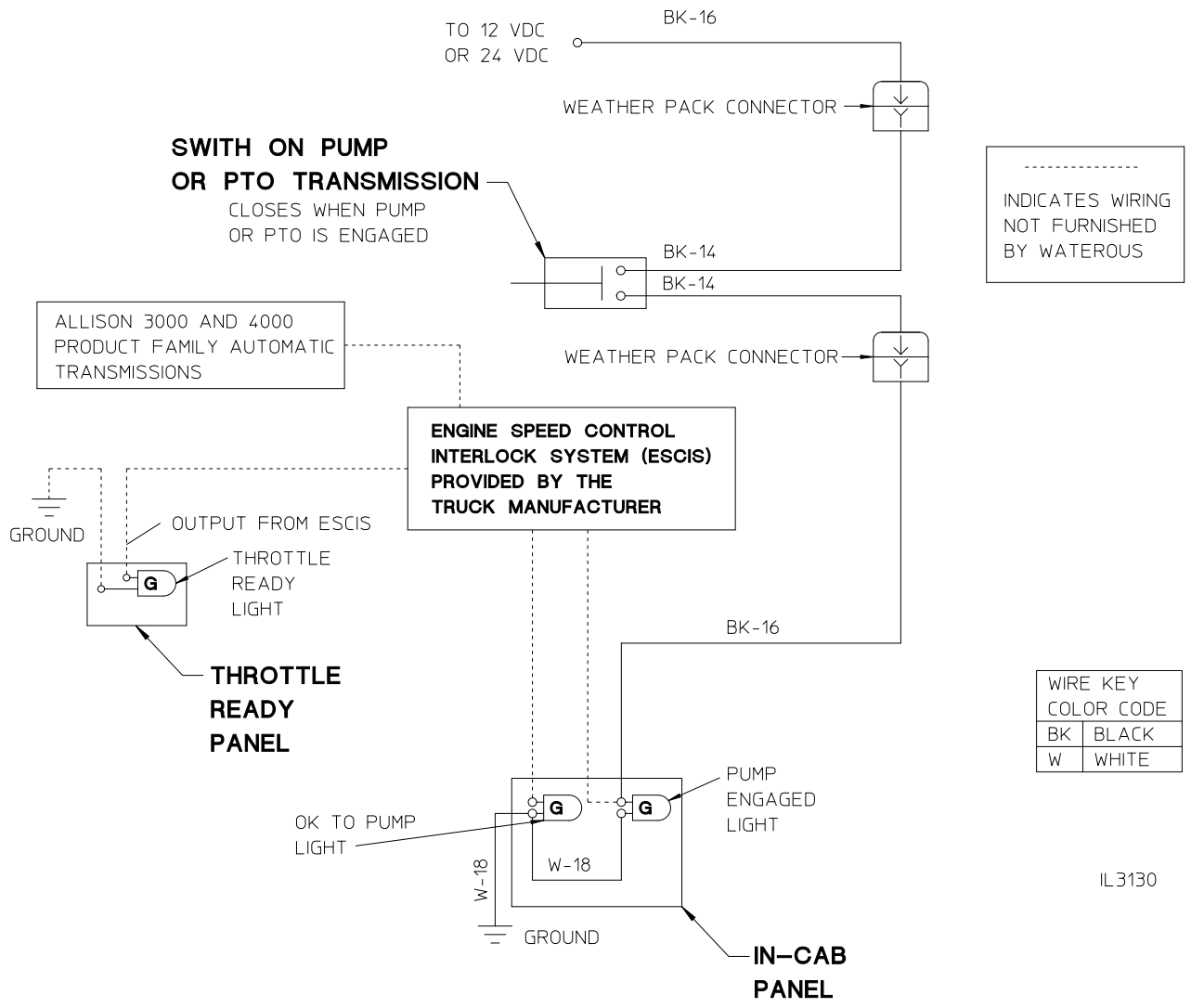

NOTES:

1. Number following color code is the wire size (AWG.) (I.E. BK-16 is a black 16 AWG wire).
2. ESCIS - Engine Speed Control Interlock System.

Shift Linkage – Manual Operation