WATEROUS

Form Number F2916 Issue Date: Aug 23, 2021

TQB Power Take-Off

Overhaul Instructions

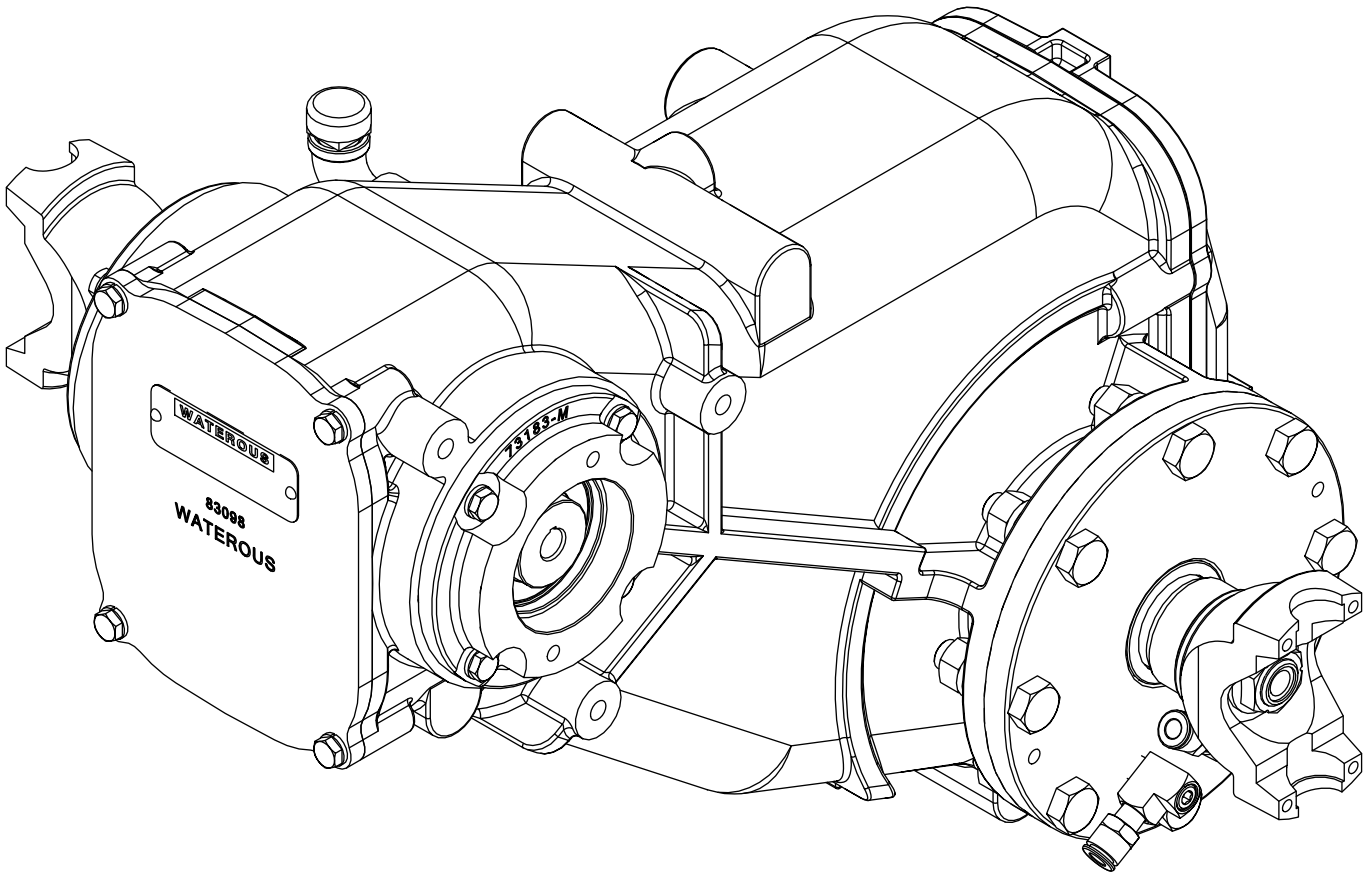

Waterous Company • 125 Hardman Avenue South • South Saint Paul, MN 55075 • (651) 450-5000
www.waterousco.com

Table of Contents

Safety 4
Safety Precautions 4

Introduction 5
Using this Document 5
Viewing the Document Electronically 5
Printing the Document 5
Symbols 5
Identifying Exterior Components—Output Side and Bottom Pan 6
Identifying Exterior Components—Output Side and Top Cover 7

Disassembly 8
Preparing to Disassemble the Power Take-Off 8
Tools Required 8
Preparing the Apparatus 8
Best Practices 8
Removing the Power Take-Off 8
Disassembling the Power Take-Off Components 8
Draining the Oil 9
Removing the End Yokes 10
Removing the Top Cover 11
Removing the Bottom Pan 12
Removing the Chain 13
Removing the Oil Seal Housing and Bearing Cover 14
Removing the Hydraulic Pump Adapter and Oil Seal Housing 15
Removing the Drive Components 16

Assembly 21
Preparing to Assemble the Power Take-Off 21
Tools Required 21
Best Practices 21
Assembling the Power Take-Off Components 21
Installing the Power Take-Off 21
Power Take-Off Assembly—Driveline 22
Assembling the Driven Shaft 23
Installing the Driven Components 24
Assembling the Drive Shaft 25
Installing the Drive Components 26
Installing the Output-Side Oil Seal Housing 27
Installing the Bearing Cover 29
Installing the Hydraulic Pump Adapter 30
Installing the Input-Side Oil Seal Housing 31
Installing the Chain 32
Installing the Bottom Pan 34
Installing the Top Cover 35
Installing the Input-Side End Yoke 36
Installing the Output-Side End Yoke 37
Adding Oil to the Power Take-Off 38

Safety Precautions

- Read and understand this document before you begin the overhaul.
- Read and understand all the notices and safety precautions.
- Be aware that these instructions are only guidelines and are not meant to be definitive. Contact Waterous when you have questions.
- Do not overhaul this equipment if you are not familiar with the tools and skills needed to safely perform the required procedures.
- Do not modify the equipment.
- Waterous reserves the right to make modifications to the instructions without notice.

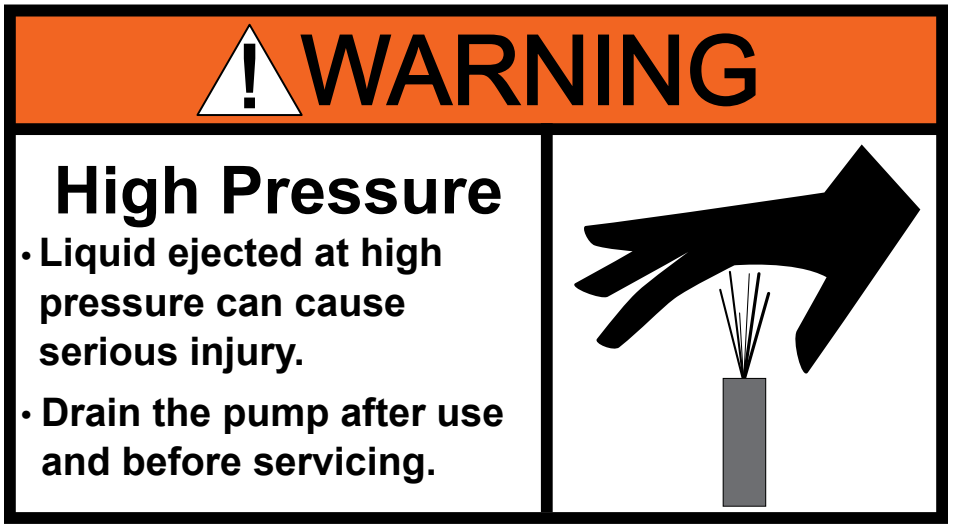

Use this document to overhaul your Waterous equipment. Please understand the following conditions:

- Be aware that these instructions are only guidelines and are not meant to be definitive. Contact Waterous when you have questions.
- Understand that your configuration may require additional steps, that are not described in the illustrations or instructions, to perform the overhaul.
- The equipment described in this document is intended to be overhauled by a person or persons with the necessary skills and knowledge to perform the overhaul.

This document is divided into the following sections:

SAFETY

This section describes general precautions and alert symbols that are in this document.

INTRODUCTION

This section is an overview of the document.

DISASSEMBLY

This section describes disassembly procedures.

ASSEMBLY

This section describes assembly procedures.

Using this Document

Use the guidelines below when viewing this document.

Viewing the Document Electronically

- View this document in landscape orientation.
- Use the table of contents to navigate directly to that section.
- Text **with this appearance** is linked to a reference.

Printing the Document

- The document is viewed the best when printed in color.
- The *print on both sides* and *flip on long edge* features can provide the best results.
- Use a 3-ring binder to store the document.

Symbols

Symbols are used to illustrate additional tools or operations that are required to complete the instructions.

	Arbor press—This symbol tells you to use an arbor press to complete this step.
	Discard—This symbol tells you to discard or recycle the part in accordance with local regulations.
	Finger tight, then quarter turn—This symbol tells you to secure the hardware to finger tight, then use a wrench to turn the hardware an additional quarter turn.
	High-pressure grease—This symbol tells you to apply high-pressure grease to the surfaces that you are pressing together.
	Sealant—This symbol tells you to apply an appropriate sealant to the part.
	Anti-seize—This symbol tells you to apply anti-seize to the part.
	Torque to specification—This symbol tells you to torque the hardware to the specified value.

Identifying Exterior Components—Output Side and Bottom Pan

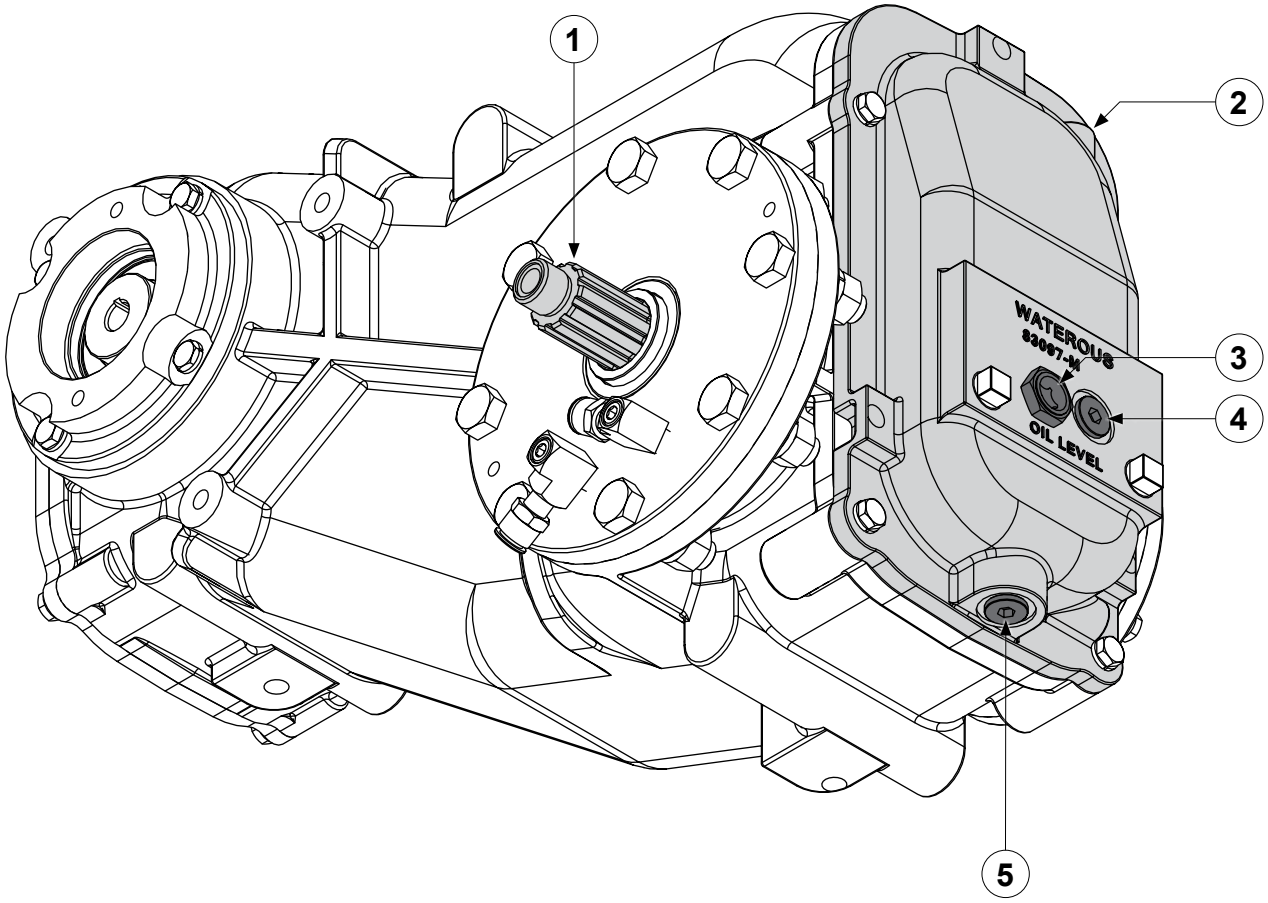

Use the illustration to identify various components on the power take-off.

1	Driven shaft
2	Bottom pan
3	Sight plug
4	Oil level plug
5	Oil drain plug

Identifying Exterior Components—Output Side and Top Cover

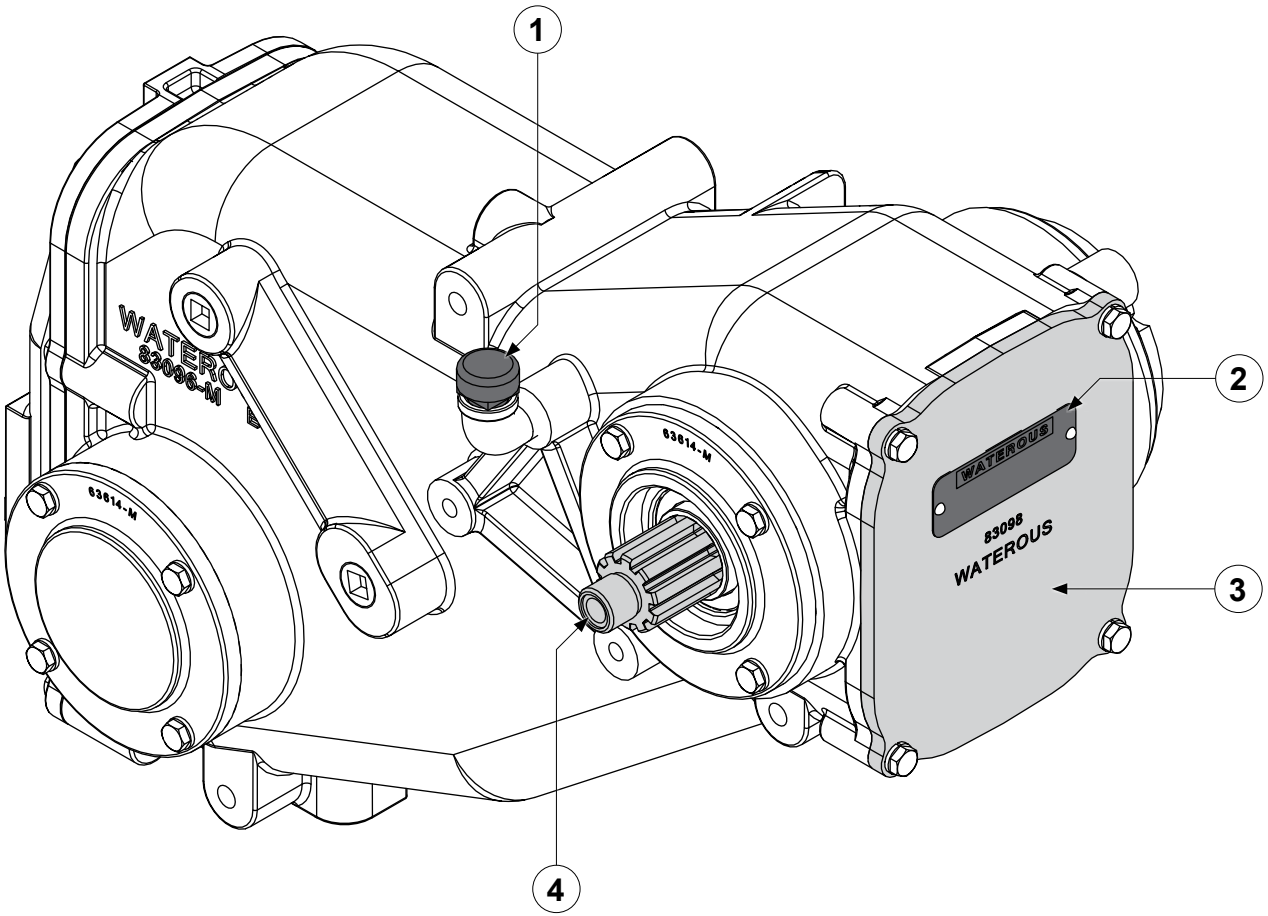

Use the illustration to identify various components on the power take-off.

1	Breather
2	Serial plate
3	Top cover
4	Drive shaft

Preparing to Disassemble the Power Take-Off

- Read and understand the instructions before disassembling the equipment.
- Prepare a workspace suitable to accommodate and support the power take-off (PTO).
- Gather the necessary tools, cleaning cloths, brushes, and penetrating fluids.
- Understand that your configuration may require additional steps that are not described in the illustrations or instructions to perform the disassembly.
- This equipment is intended to be disassembled by a person or persons with the basic knowledge of servicing similar equipment. Contact Waterous with questions.

Tools Required

- Typical automotive mechanics hand tools.
- Suitable arbor press.
- Suitable support and lifting equipment.

Preparing the Apparatus

- Park the apparatus on a level surface in a well-lit area.
- Engage the parking brake.
- Shut off the engine and remove the key from the ignition switch.
- Allow the apparatus to cool before servicing.

Best Practices

- Remove any dirt, sand, grease, or oil from the enclosure before you disassemble the power take-off. Surface debris can transfer into the pump interior and prematurely wear internal parts.
- Only use a clean, lint-free cloth, a debris-free work surface, and properly maintained tools to perform the disassembly.
- Replace any gaskets and O-ring seals during the overhaul.
- Do not reuse the self-locking nuts.
- Apply penetrating oil to screws and nuts before disassembly.

Removing the Power Take-Off

Removing the PTO for overhaul varies by application. Your application may require components such as cooling lines, support brackets, plumbing connections, and other accessories be removed or disconnected before removing the PTO.

Record the process used to remove the equipment from the apparatus. Use this information to install the equipment into the apparatus after the overhaul.

Disassembling the Power Take-Off Components

- Refer to the service parts list (SPL) for part identification and disassemble order.

  Note: *Documents specific to your application are available through the MyWaterous login at Waterousco.com by entering the serial number for your system. Depending on the application, the serial number for your equipment is located on the operator panel, pump, PTO, or some combination of the three.*

- Use established industry practices to disassemble the PTO.
- Record or mark components as you remove them to make sure that you install them in the same orientation.
- Discard or recycle drained fluids collected during the overhaul in accordance with your local regulations.

Draining the Oil

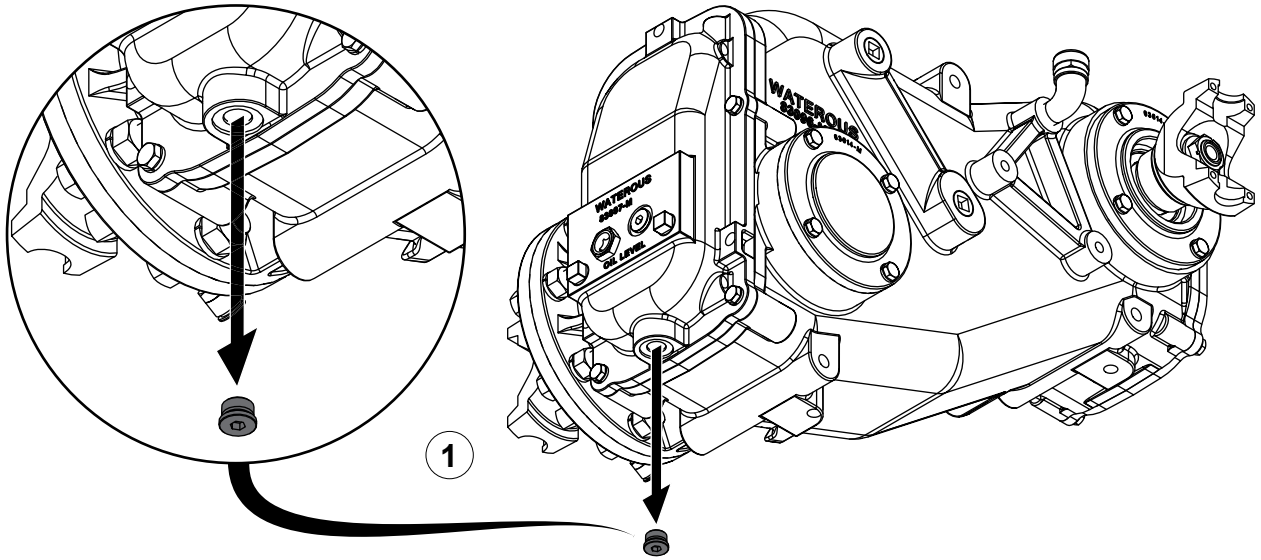

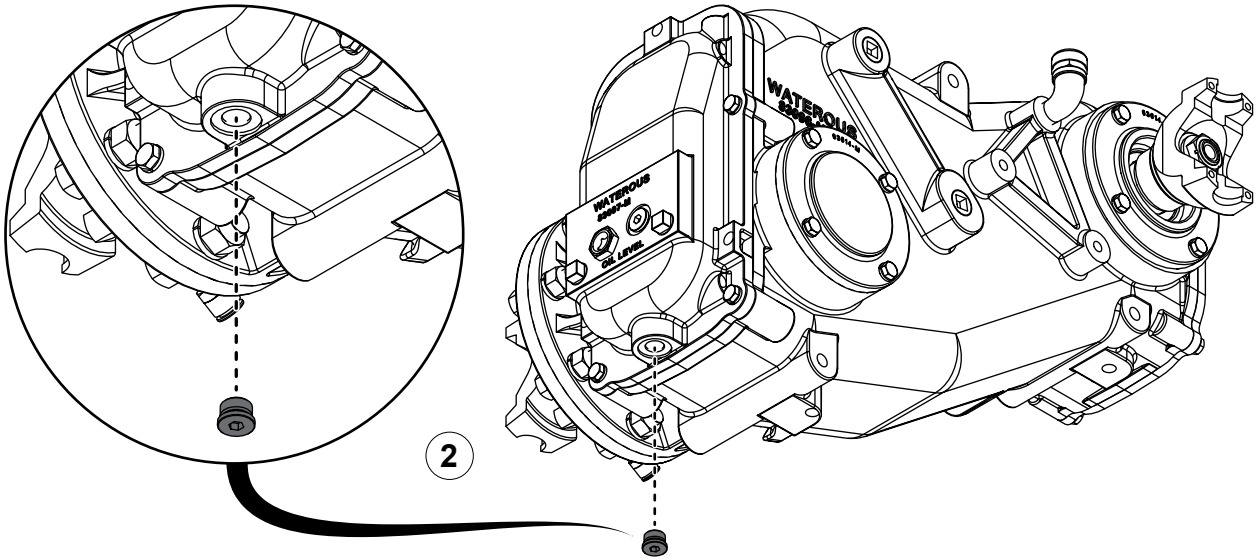

Use the illustrations and instructions to drain the oil from the power take-off.

1 To drain the oil, do the following:
- Use the oil level plug to approximate the amount of oil in the PTO.
- Place a suitable container under the PTO to collect the drained oil.
- Locate and remove the oil drain plug.
- Allow the oil to drain.

2 Install the oil drain plug.

Note: *Make sure that you do not over-tighten the oil drain plug.*

Removing the End Yokes

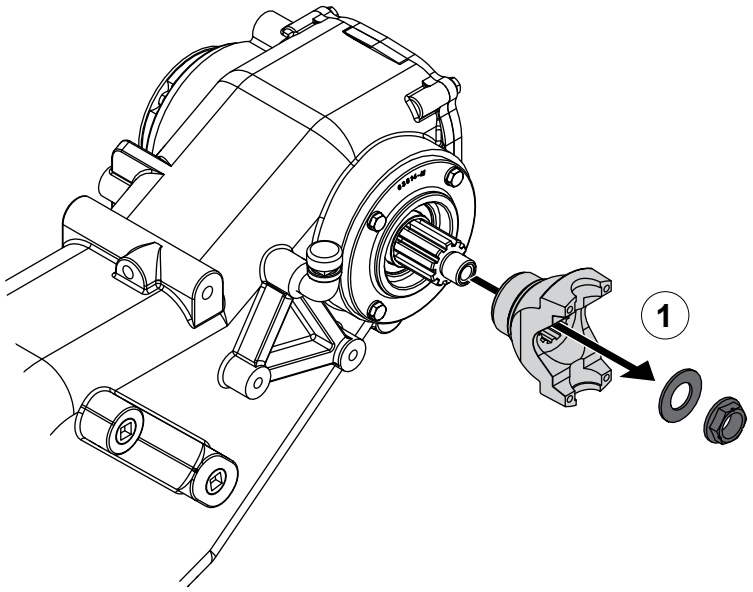

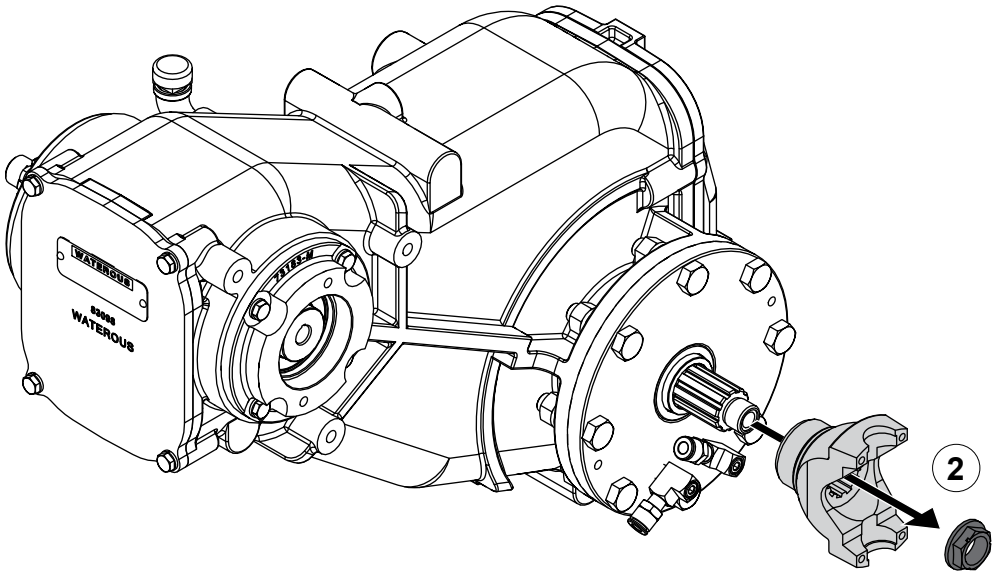

Use the illustrations and instructions to remove the end yokes.

1	Remove the locknut and washer, then remove the end yoke.
2	Remove the locknut, then remove the end yoke.

Removing the Top Cover

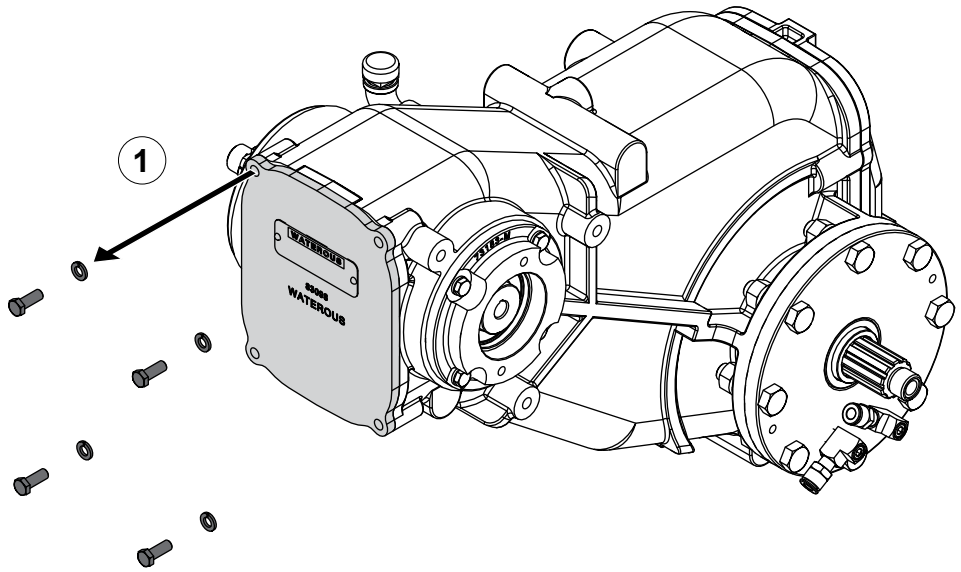

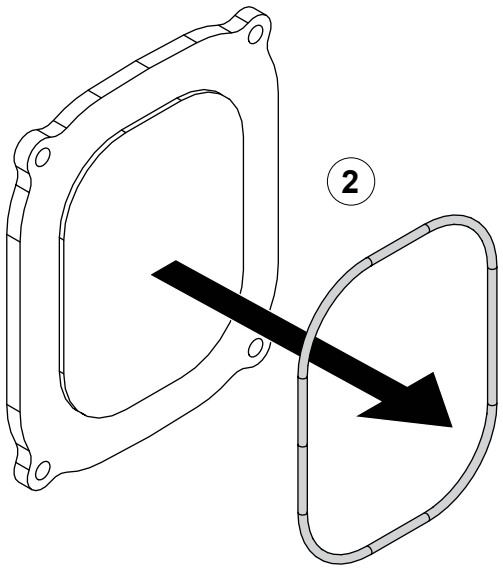

Use the illustrations and instructions to remove the top cover.

1	Remove the mounting hardware, then remove the top cover.
2	Remove and discard the O-ring.

Removing the Bottom Pan

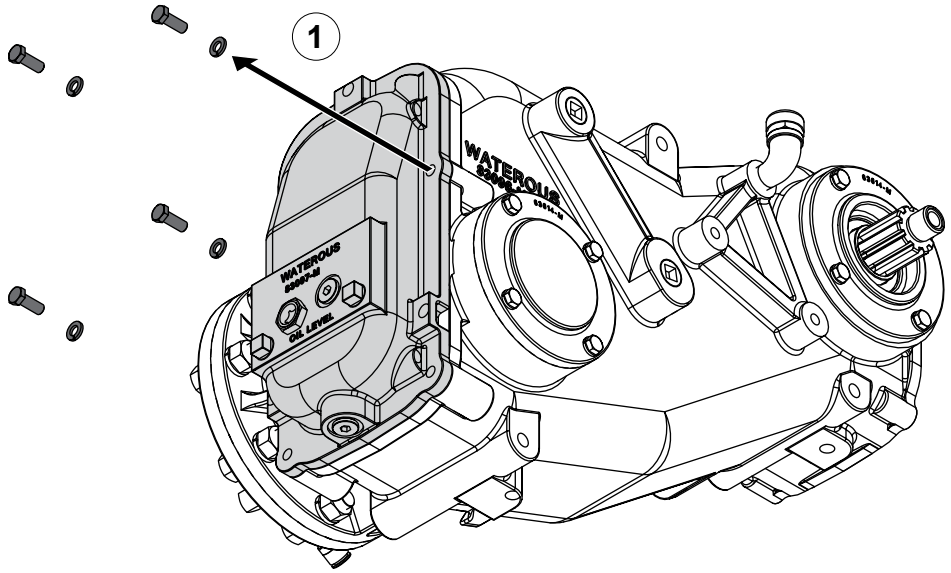

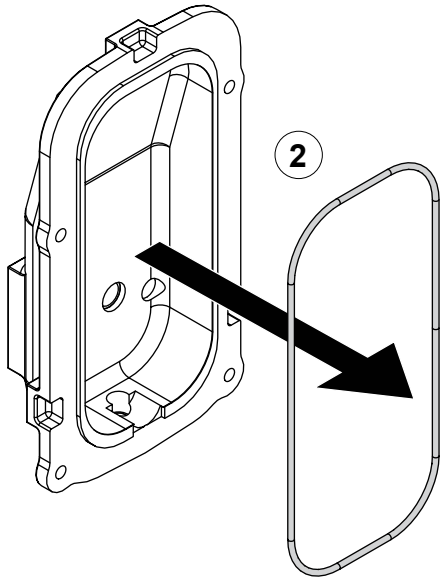

Use the illustrations and instructions to remove the bottom pan.

1	Remove the mounting hardware, then remove the bottom pan.
2	Remove and discard the O-ring.

Removing the Chain

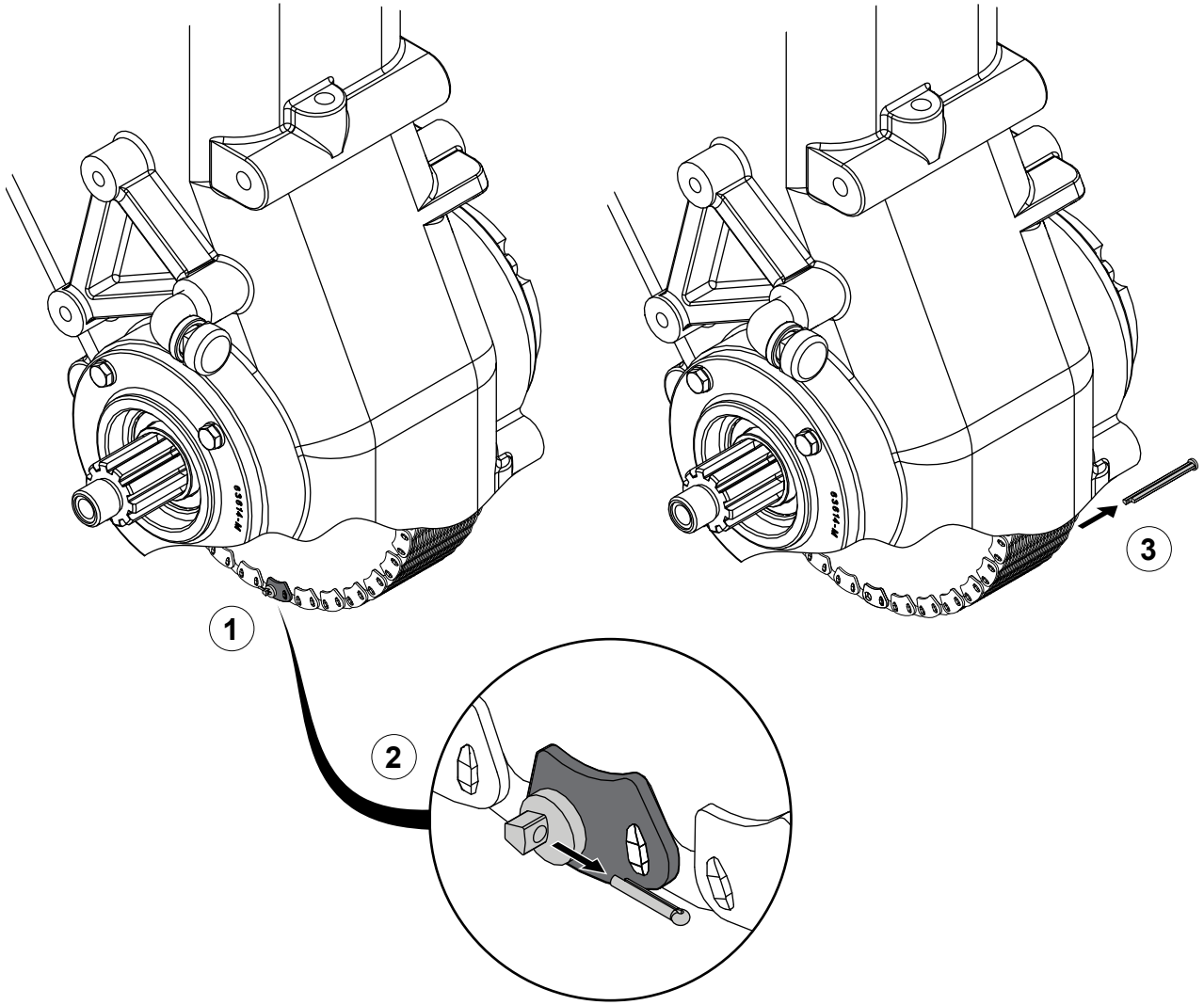

Use the illustrations and instructions to separate and remove the chain.

1	Locate the connecting link.
2	Use side cutters, needle-nose pliers, or a similar tool to remove the cotter pin. ***Note:*** *Replace the cotter pin if it is damaged during removal.*
3	Remove the connecting pin set, then remove the chain.

Removing the Oil Seal Housing and Bearing Cover

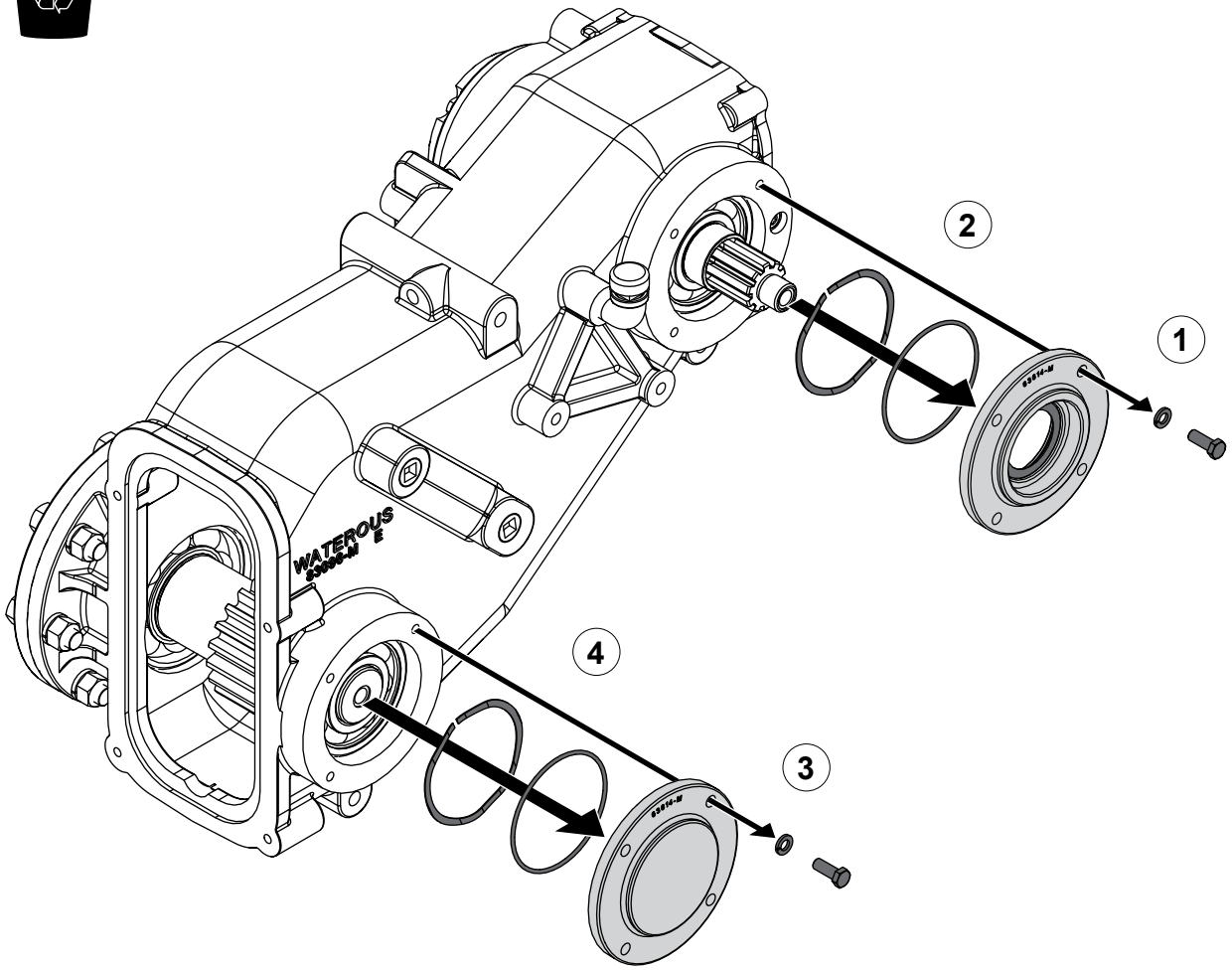

Use the illustration and instructions to remove the oil seal housing, bearing cover, and associated components.

1	Remove the mounting hardware, then remove the oil seal housing and oil seal.
2	Remove the O-ring and wave spring, then discard the O-ring.
3	Remove the mounting hardware, then remove the bearing cover.
4	Remove the O-ring and wave spring, then discard the O-ring.

Removing the Hydraulic Pump Adapter and Oil Seal Housing

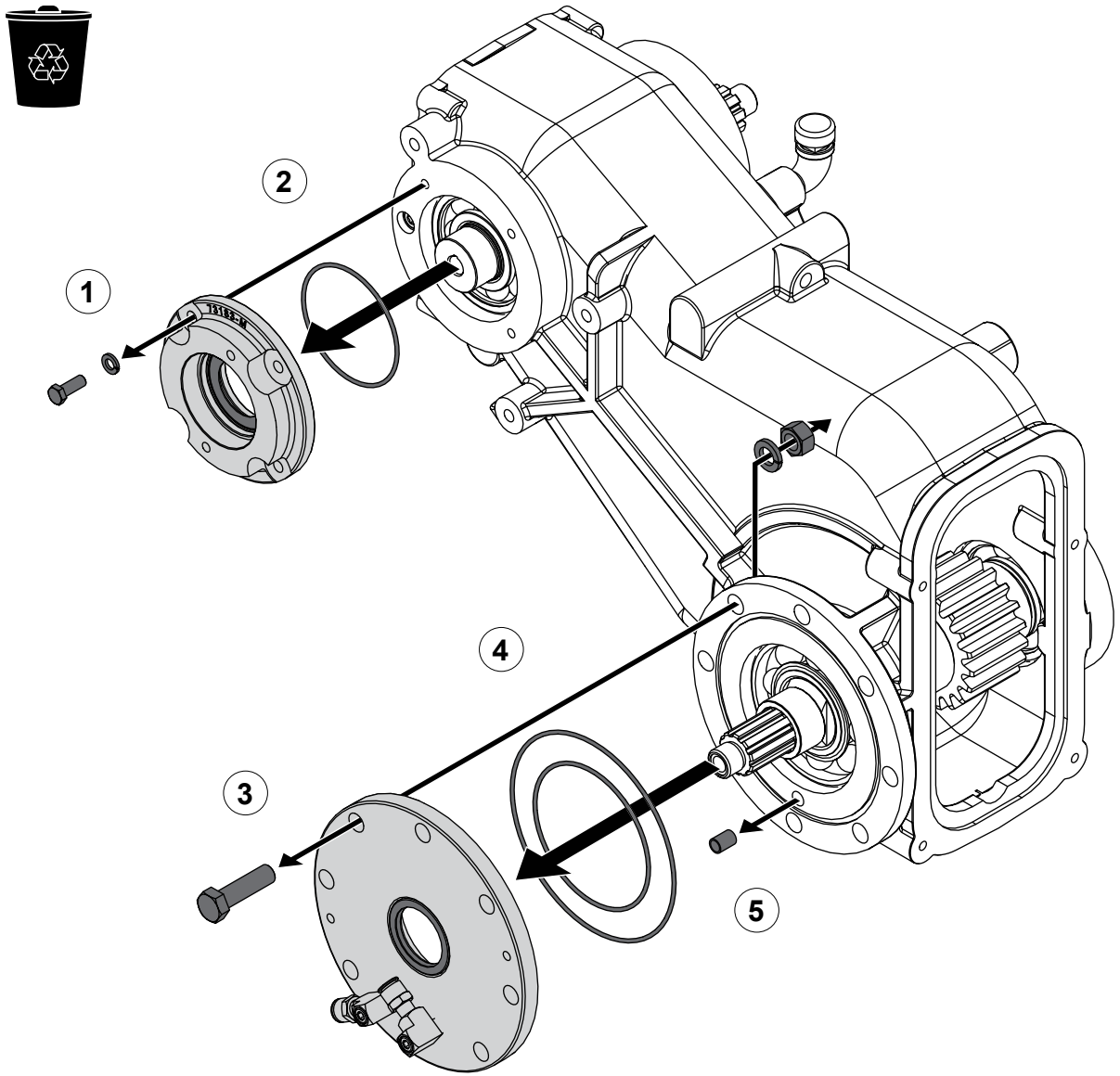

Use the illustration and instructions to remove the hydraulic pump adapter, oil seal housing, and associated components.

1	Remove the mounting hardware, then remove the hydraulic pump adapter and oil seal.
2	Remove and discard the O-ring.
3	Remove the mounting hardware, then remove the oil seal housing and oil seal.
4	Remove and discard the O-rings.
5	Remove the tube.

Removing the Drive Components

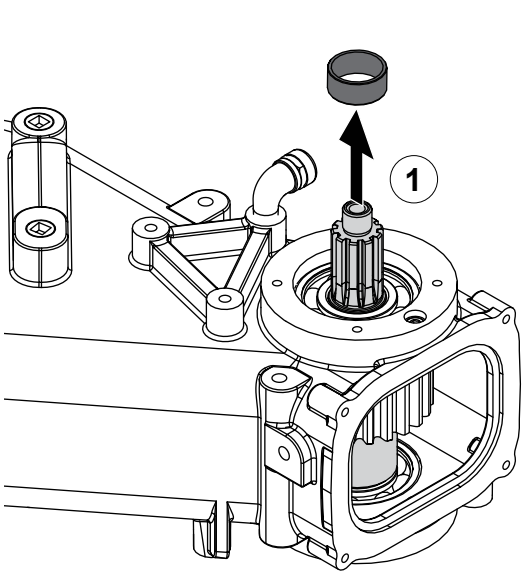

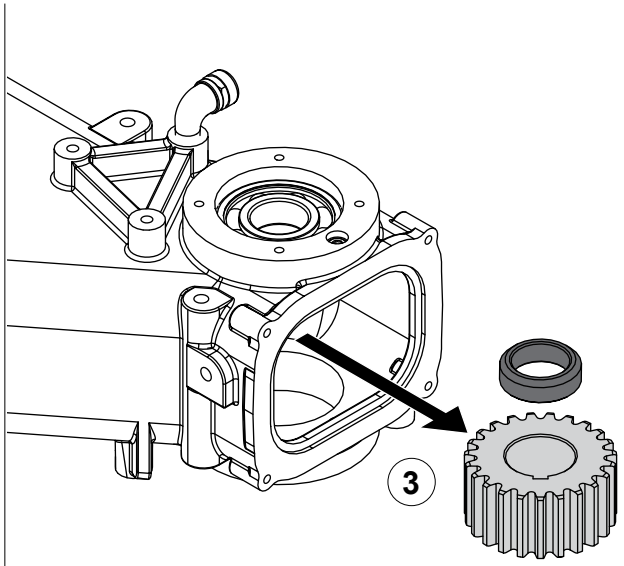

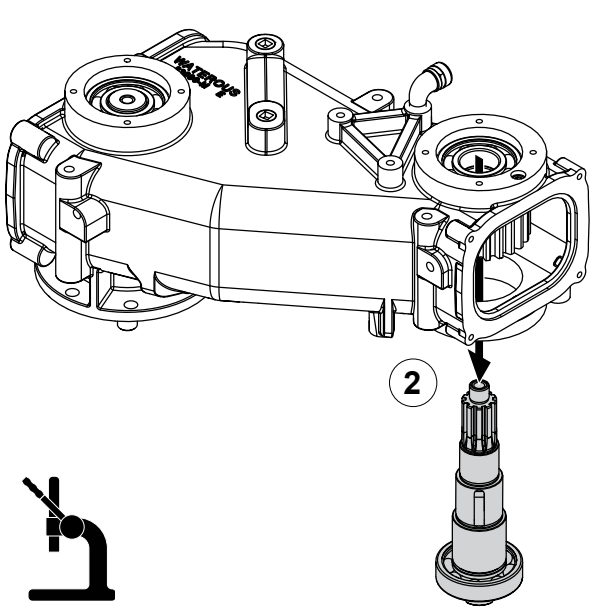

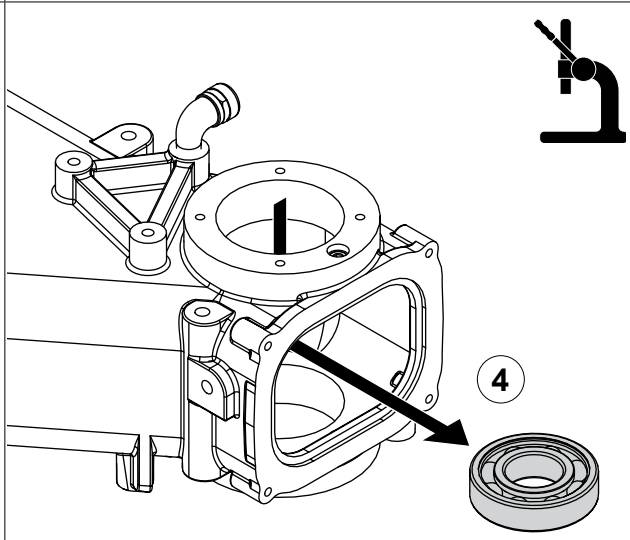

Use the illustrations and instructions to remove the drive shaft and associated components.

1	Remove the oil seal sleeve from the drive shaft.
2	Use an arbor press to remove the drive shaft and bearing.
3	Remove the spacer and drive sprocket from the chain case.
4	Use an arbor press to remove the bearing.

Disassembling the Drive Shaft

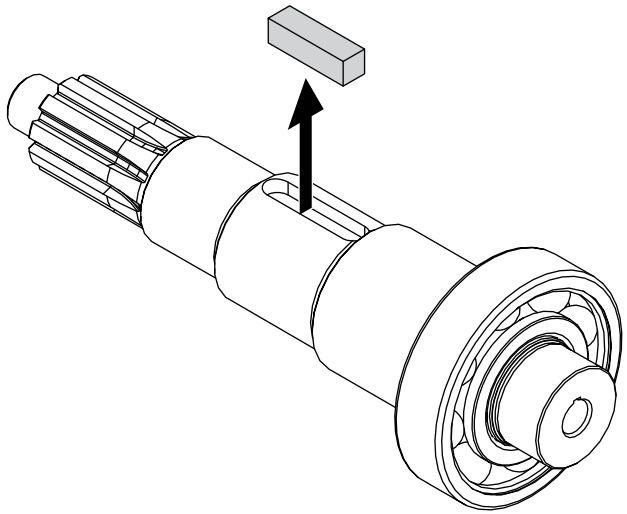

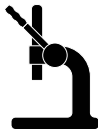

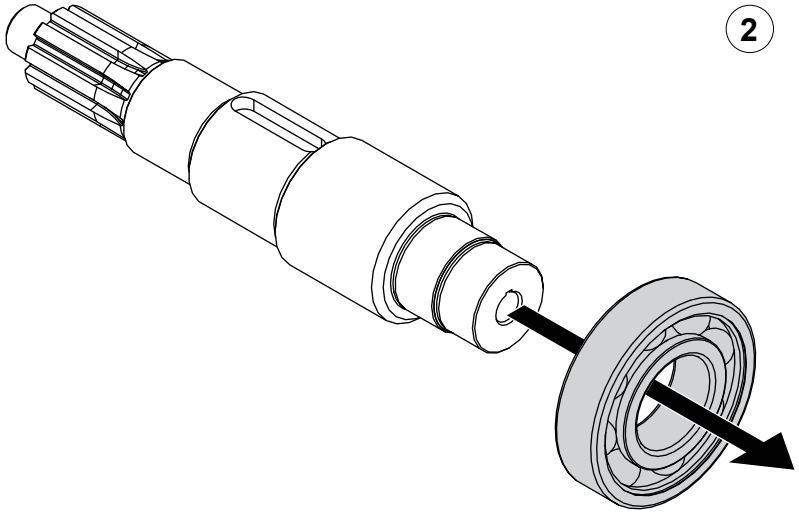

Use the illustrations and instructions to disassemble the drive shaft assembly.

1	Remove the key from the keyway.
2	Use an arbor press to remove the bearing from the shaft.

Removing the Driven Components

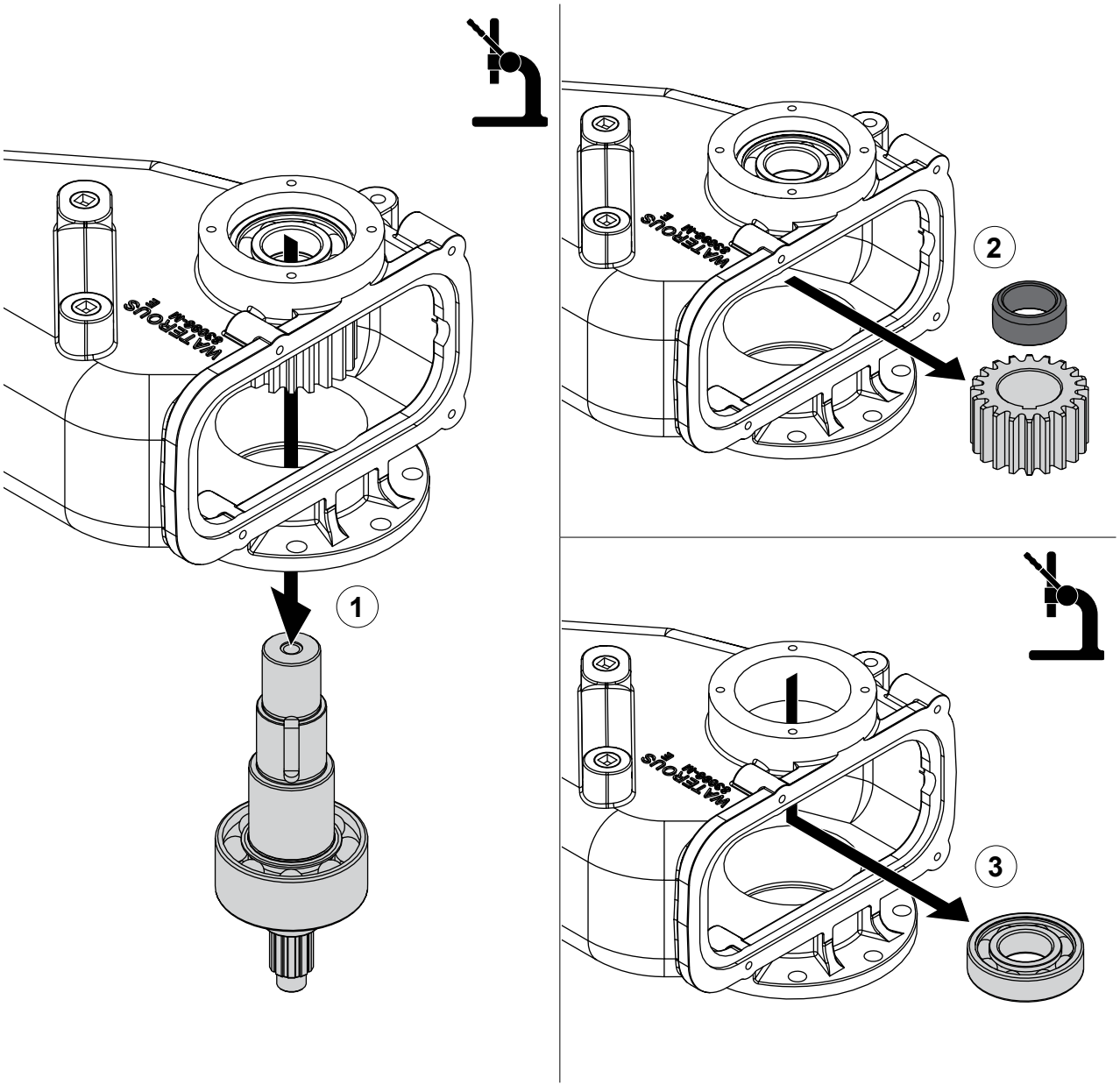

Use the illustrations and instructions to remove the driven shaft and associated components.

1	Use an arbor press to remove the driven shaft and bearing.
2	Remove the spacer and driven sprocket from the chain case.
3	Use an arbor press to remove the bearing.

Disassembling the Driven Shaft

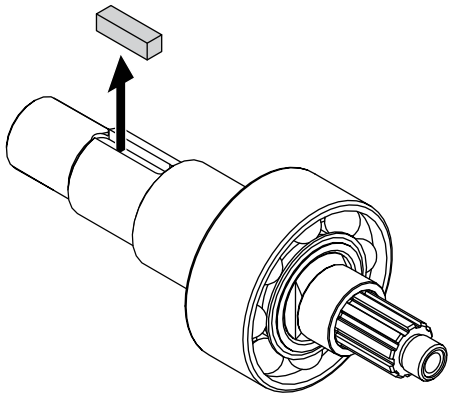

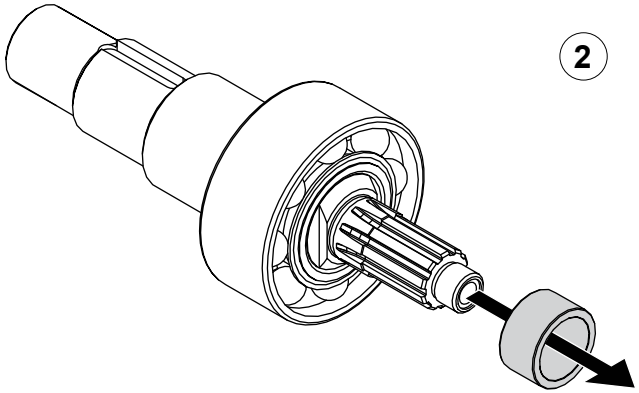

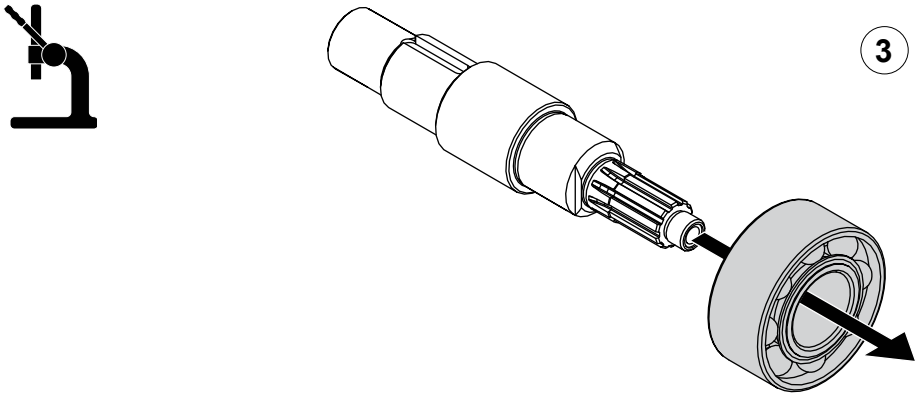

Use the illustrations and instructions to disassemble the driven shaft assembly.

1	Remove the key from the keyway.
2	Remove the oil seal sleeve from the shaft.
3	Use an arbor press to remove the bearing from the shaft.

Notes

Preparing to Assemble the Power Take-Off

- Read and understand the instructions before assembling the power take-off (PTO).
- Prepare a workspace suitable to accommodate and support the PTO.
- Gather the necessary tools.
- Gather the cleaning cloths, brushes, and fluids.
- Gather the penetrating fluids, lubricants, sealant, and anti-seize.
- Understand that your configuration may require additional steps that are not described in the illustrations or instruction to perform the assembly.
- This equipment is intended to be assembled by a person or persons with the basic knowledge of servicing similar equipment. Contact Waterous for more information.

Tools Required

- Typical automotive mechanics hand tools.
- Suitable arbor press.
- Torque wrench capable of 450 ft-lb (610 N·m).
- Suitable support and lifting equipment.

Best Practices

- Remove any dirt, sand, grease, or oil from the enclosure before you begin the overhaul. Surface debris can transfer into the pump interior and prematurely wear internal parts.
- Replace any gaskets and O-ring seals during the assembly.
- Do not reuse the self-locking nuts.
- Apply anti-seize to the self-locking nut threads before installation.

Assembling the Power Take-Off Components

- Refer to the service parts list (SPL) for part identification.

  Note: *Documents specific to your application are available through the MyWaterous login at Waterousco.com by entering the serial number for your system. Depending on the application, the serial number for your equipment is located on the operator panel, or the pump, or the power take-off, or some combination of the three.*
- Use established industry practices to assemble the PTO.
- Tighten hardware to industry standard torque specification—unless otherwise noted.
- Install retaining rings with the flat face toward the component you are retaining.
- Replace items such as O-rings, bearings, gaskets, oil seals, lubricants, and locknuts with their equivalent.

Installing the Power Take-Off

Use the information that you recorded when you removed the equipment to install it back into the apparatus.

Power Take-Off Assembly—Driveline

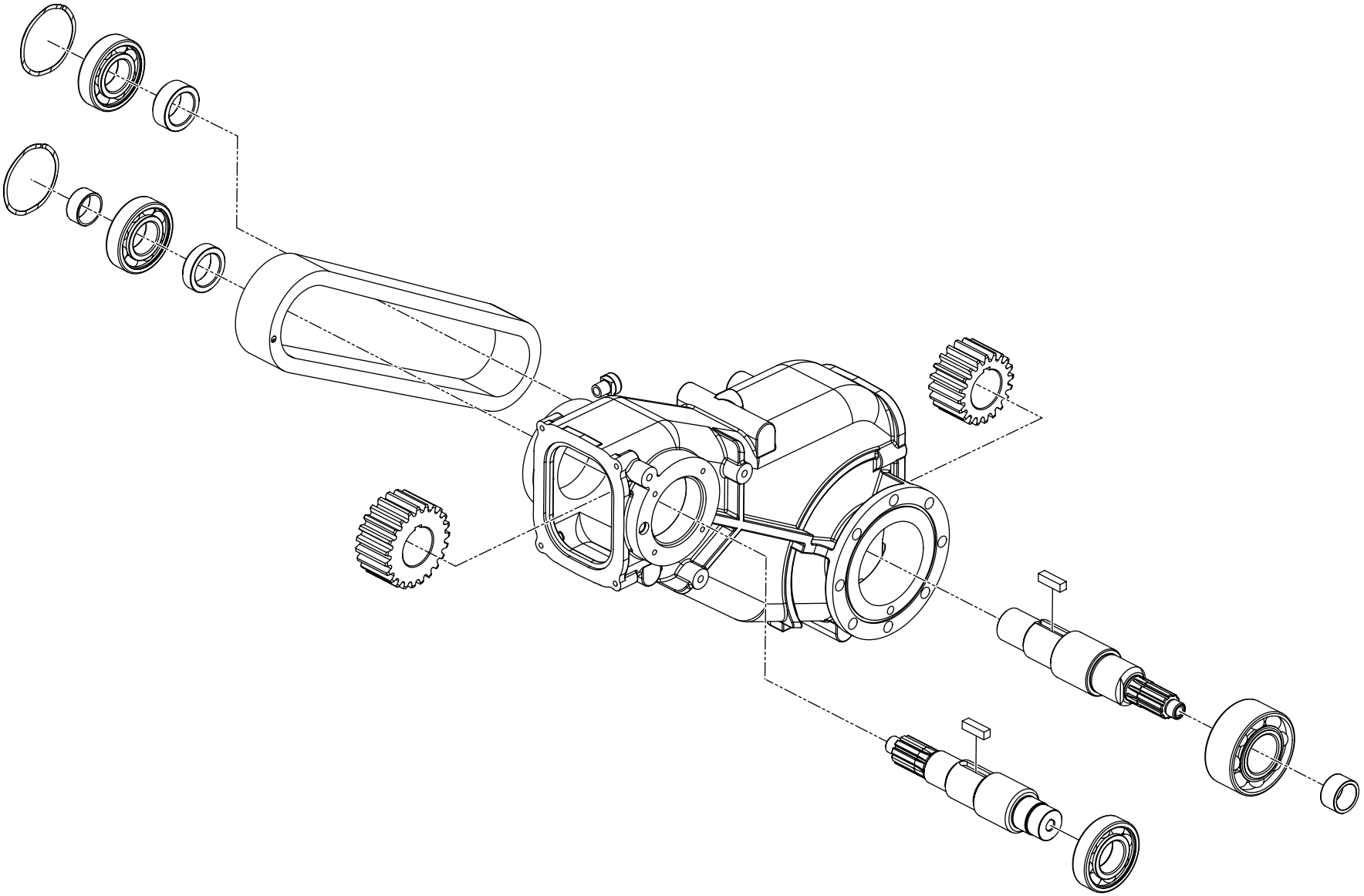

Assembling the Driven Shaft

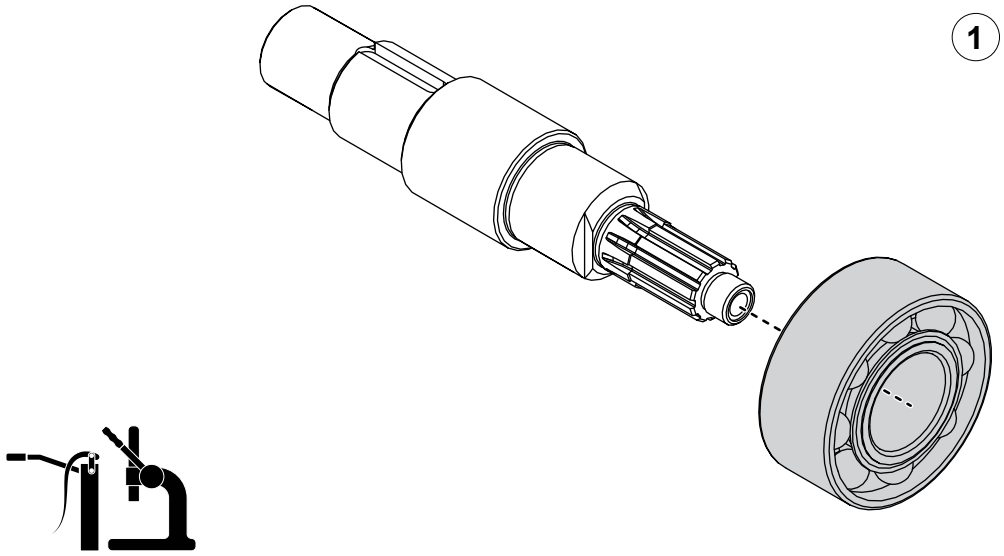

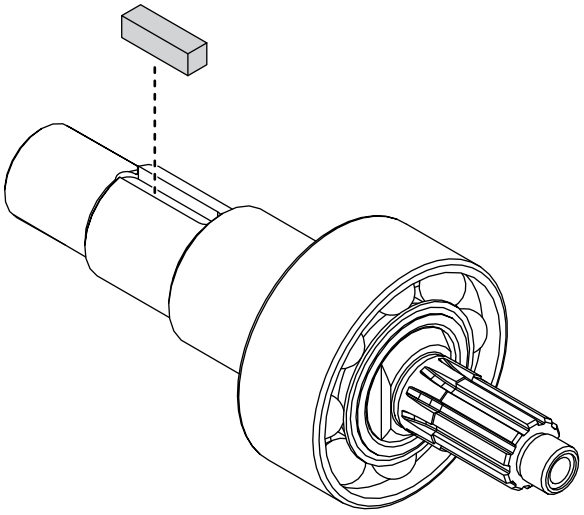

Use the illustrations and instructions to assemble the driven shaft assembly.

1	Apply grease to the driven shaft, then press the bearing onto the shaft.
2	Insert the key into the keyway.

Installing the Driven Components

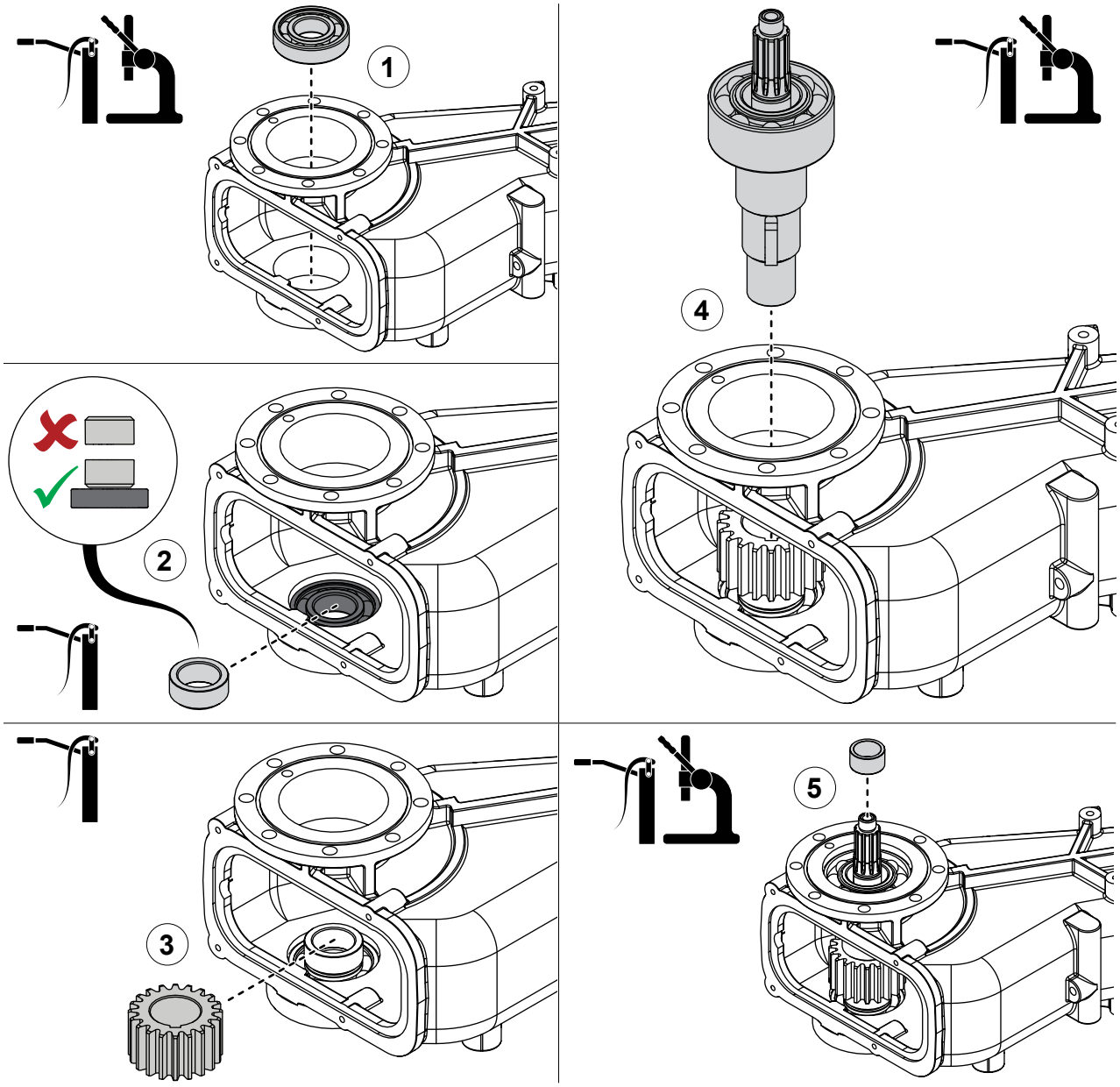

Use the illustrations and instructions to install the driven shaft assembly and associated components.

1. Apply grease to the bearing, then press it into the chain case.
2. Apply grease to the inside of the spacer, then align the spacer over the bearing.

   Note: *Make sure that you install the spacer with the beveled edge towards the bearing.*
3. Apply grease to the inside of the driven sprocket, then align the sprocket over the spacer.
4. To install the driven shaft assembly, do the following:
   - Apply grease to the shaft.
   - Align the key on the shaft with the keyway on the driven sprocket.
   - Press the driven shaft assembly through the driven sprocket, spacer, and chain case.
5. Apply grease to the driven shaft, then press the oil seal sleeve onto the shaft.

Assembling the Drive Shaft

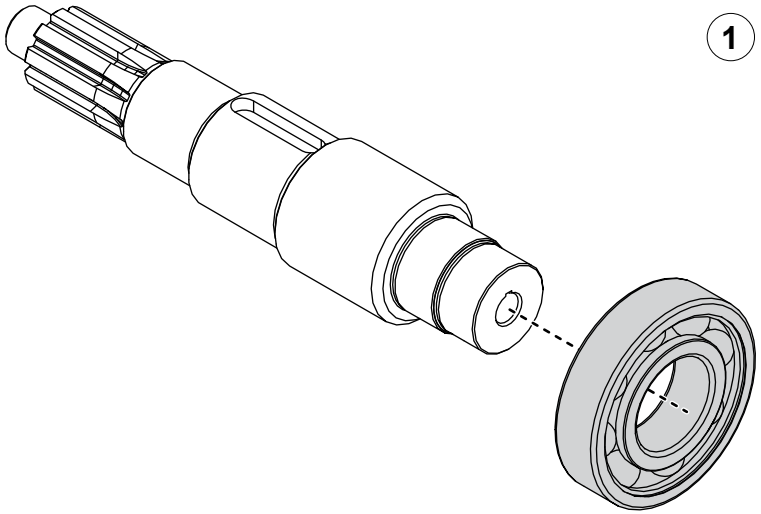

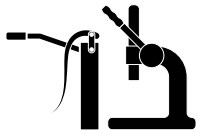

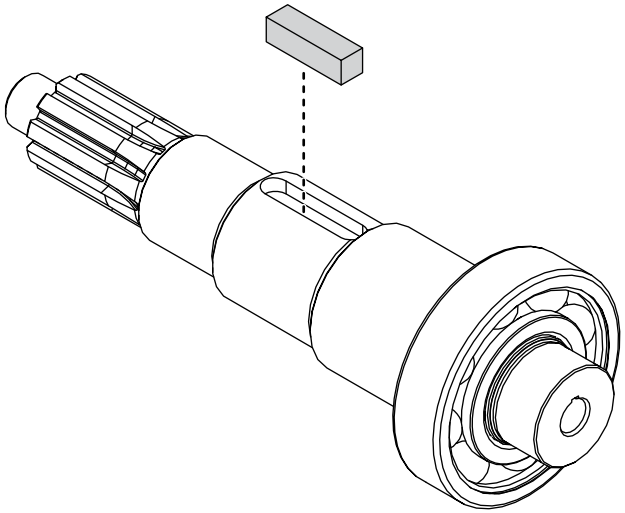

Use the illustrations and instructions to assemble the drive shaft assembly.

1	Apply grease to the drive shaft, then press the bearing onto the shaft.
2	Insert the key into the keyway.

Installing the Drive Components

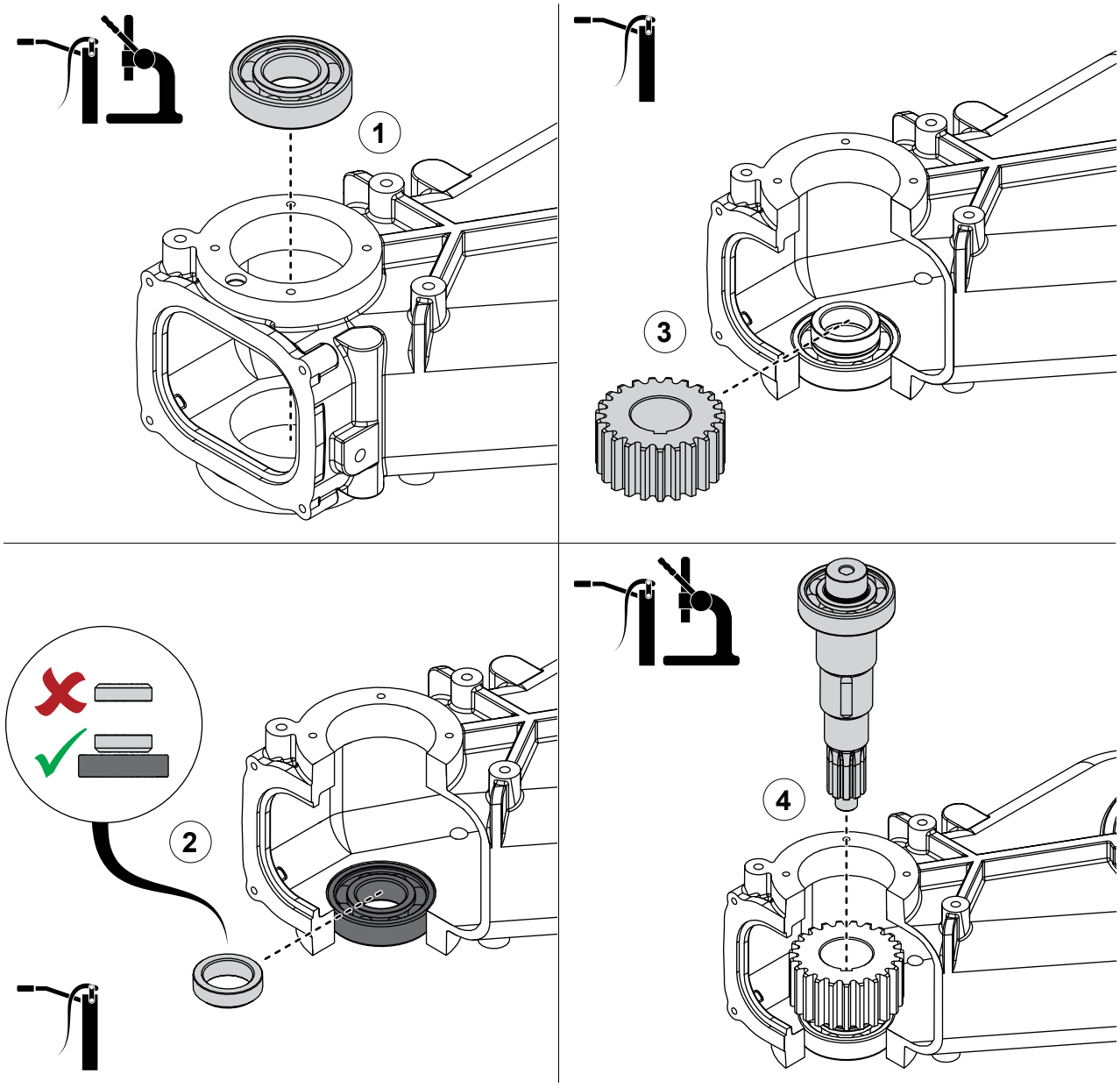

Use the illustrations and instructions to install the drive shaft assembly and associated components.

1. Apply grease to the bearing, then press it into the chain case.
2. Apply grease to the inside of the spacer, then align the spacer over the bearing.

   Note: *Make sure that you install the spacer with the beveled edge towards the bearing.*
3. Apply grease to the inside of the drive sprocket, then align the sprocket over the spacer.
4. To install the drive shaft assembly, do the following:
   - Apply grease to the shaft.
   - Align the key on the shaft with the keyway on the drive sprocket.
   - Press the drive shaft assembly through the drive sprocket, spacer, and chain case.

Installing the Output-Side Oil Seal Housing

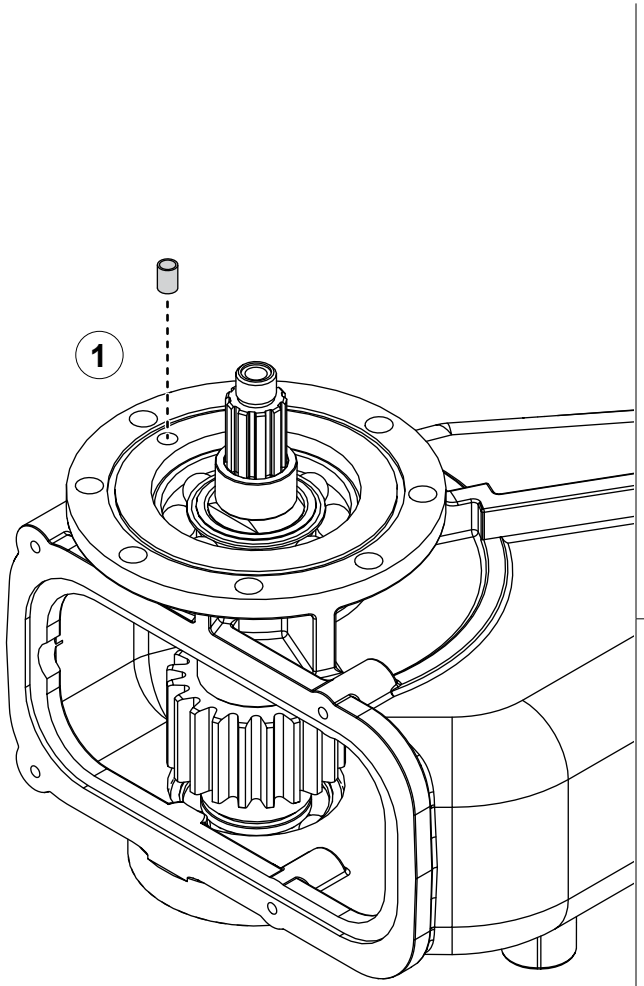

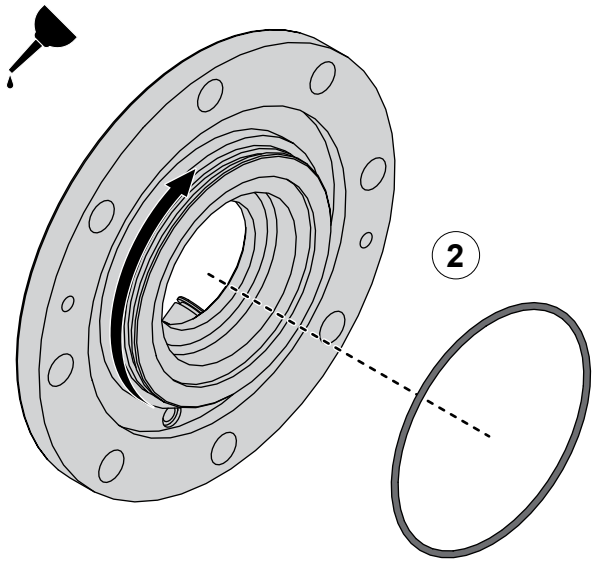

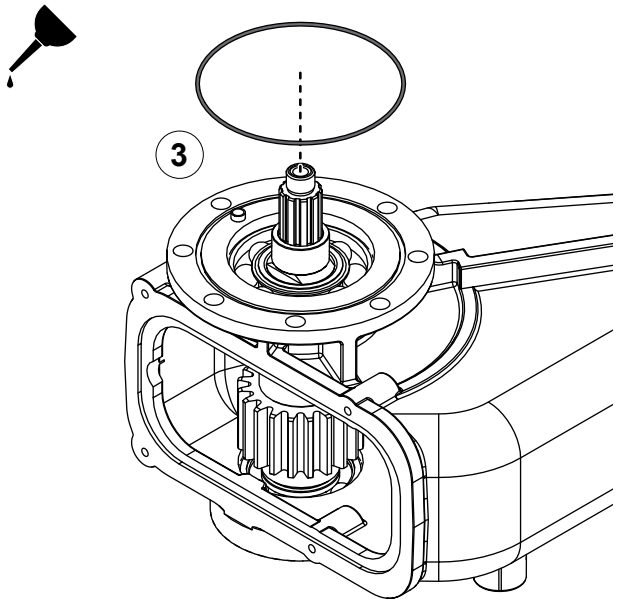

Use the illustrations and instructions to install the oil seal housing on the output side of the chain case.

1	Insert the tube into the chain case.
2	Apply lubricant to the O-ring groove, then install the O-ring around the oil seal housing.
3	Apply lubricant to the O-ring groove, then install the O-ring into the chain case.

Installing the Output-Side Oil Seal Housing

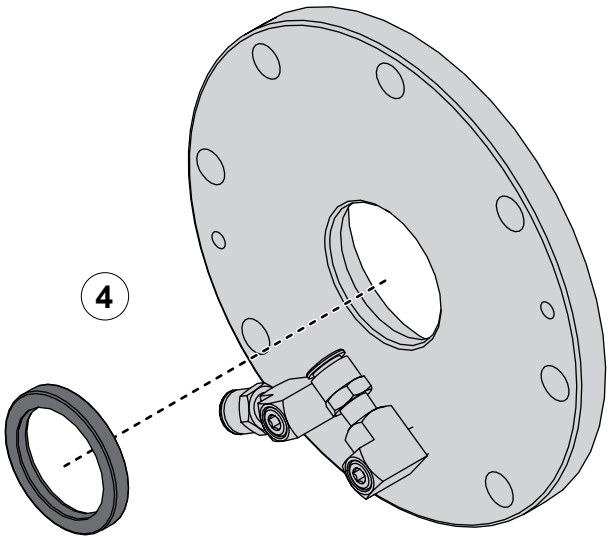

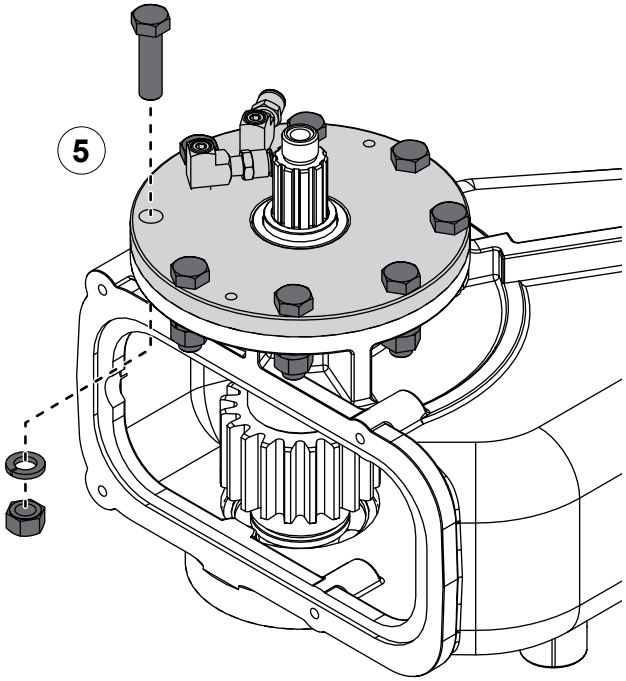

Use the illustrations and instructions to install the oil seal housing on the output side of the chain case.

4 Apply sealant around the oil seal, then install it into the oil seal housing.

5 Use the hardware that you removed earlier to install the oil seal housing.

Installing the Bearing Cover

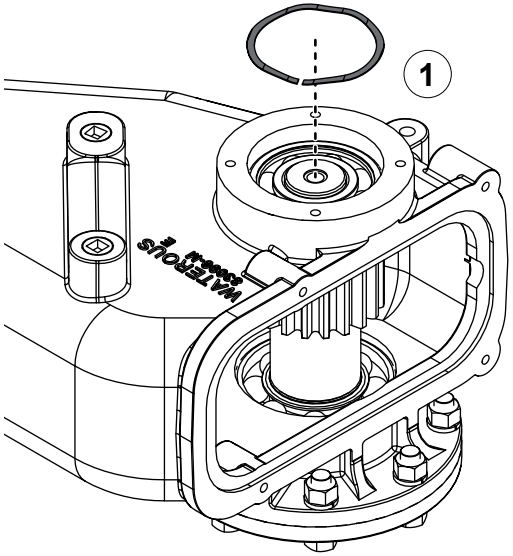

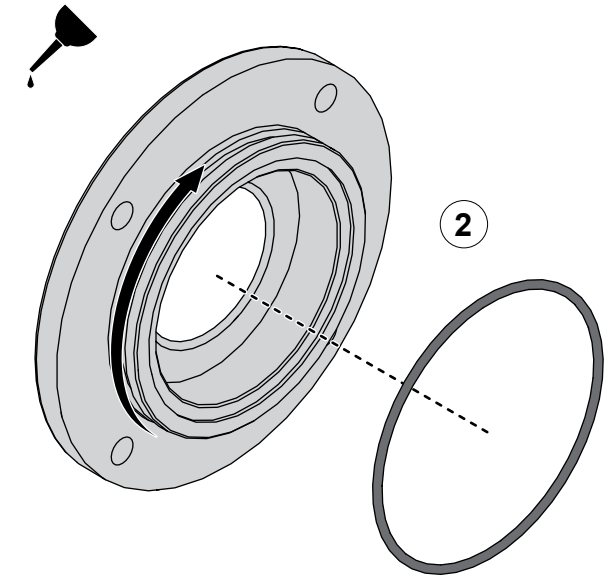

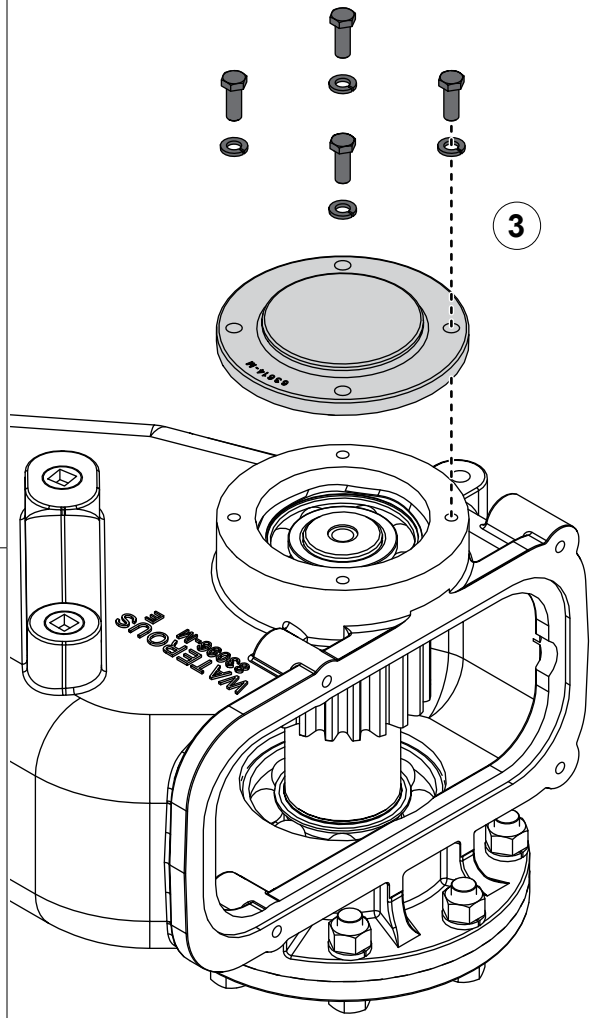

Use the illustrations and instructions to install the bearing cover on the input side of the chain case.

1	Install the wave spring into the chain case.
2	Apply lubricant to the O-ring groove, then install the O-ring around the bearing cover.
3	Use the hardware that you removed earlier to install the bearing cover.

Installing the Hydraulic Pump Adapter

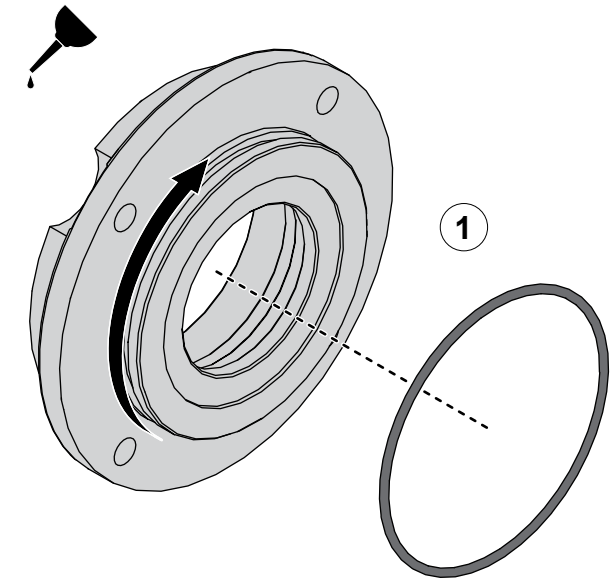

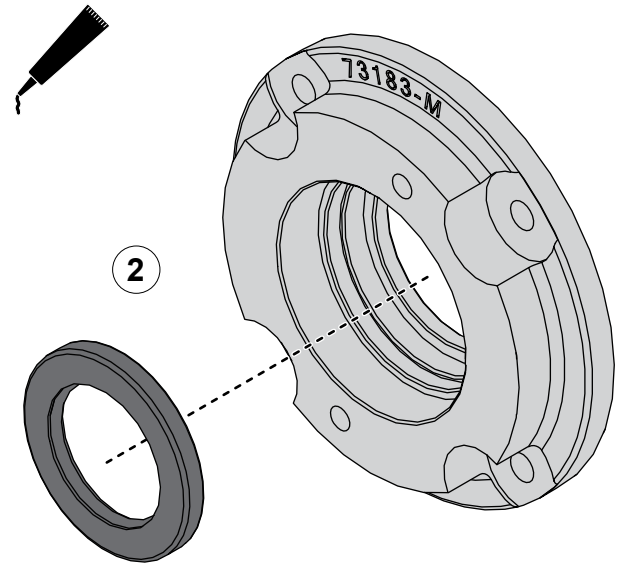

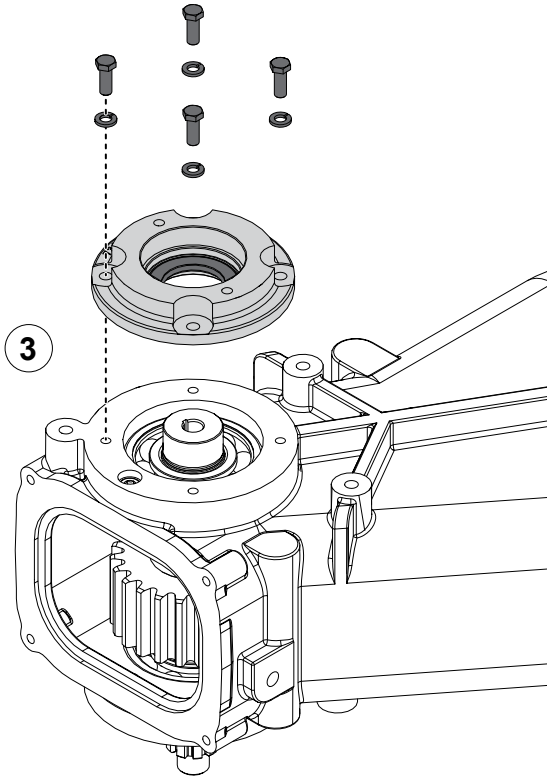

Use the illustrations and instructions to install the hydraulic pump adapter on the output side of the chain case.

1	Apply lubricant to the O-ring groove, then install the O-ring around the hydraulic pump adapter.
2	Apply sealant around the oil seal, then install it into the hydraulic pump adapter.
3	Use the hardware that you removed earlier to install the hydraulic pump adapter.

Installing the Input-Side Oil Seal Housing

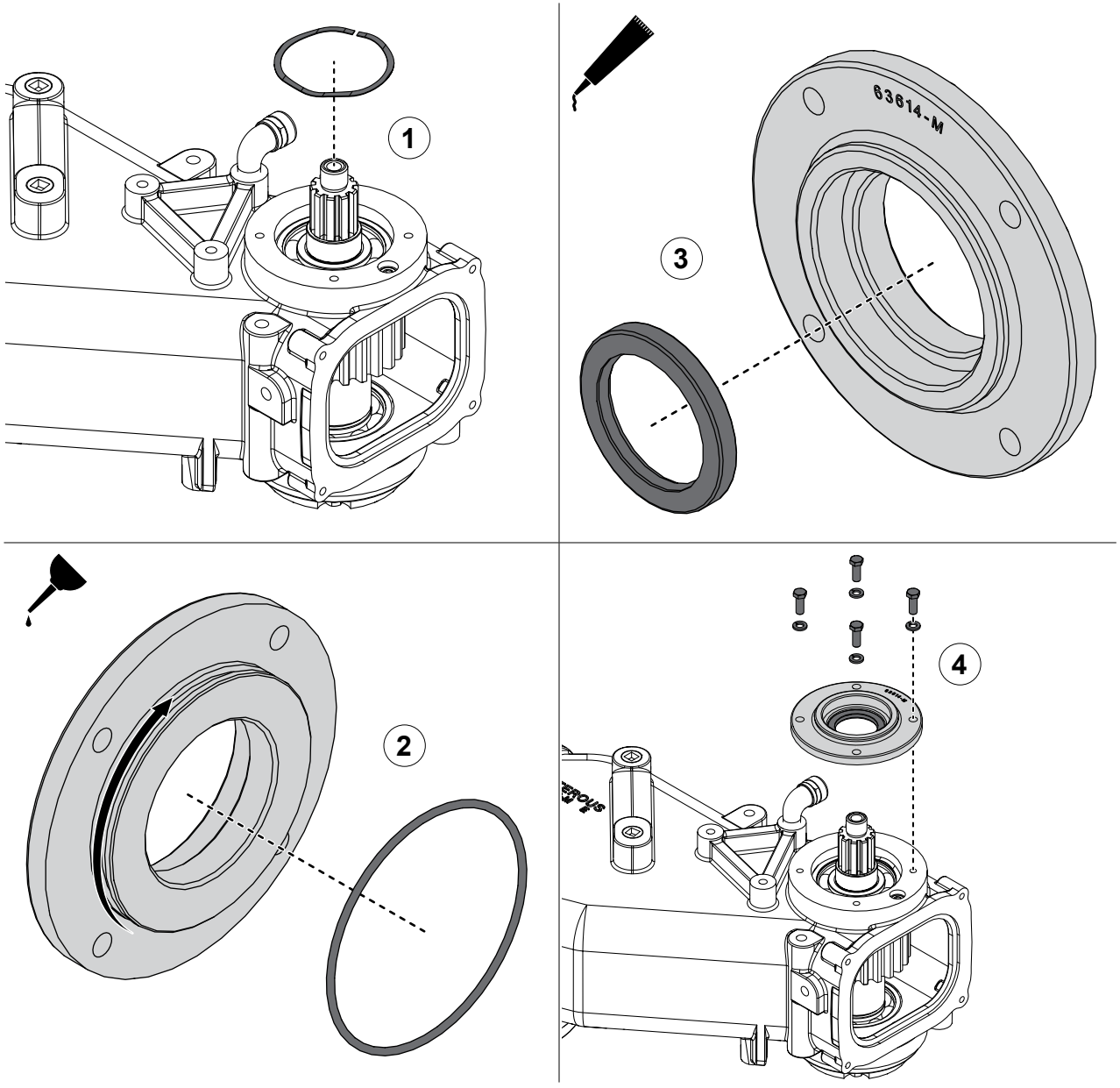

Use the illustrations and instructions to install the oil seal housing on the input side of the chain case.

1	Install the wave spring into the chain case.
2	Apply lubricant to the O-ring groove, then install the O-ring around the oil seal housing.
3	Apply sealant around the oil seal, then install it into the oil seal housing.
4	Use the hardware that you removed earlier to install the oil seal housing.

Installing the Chain

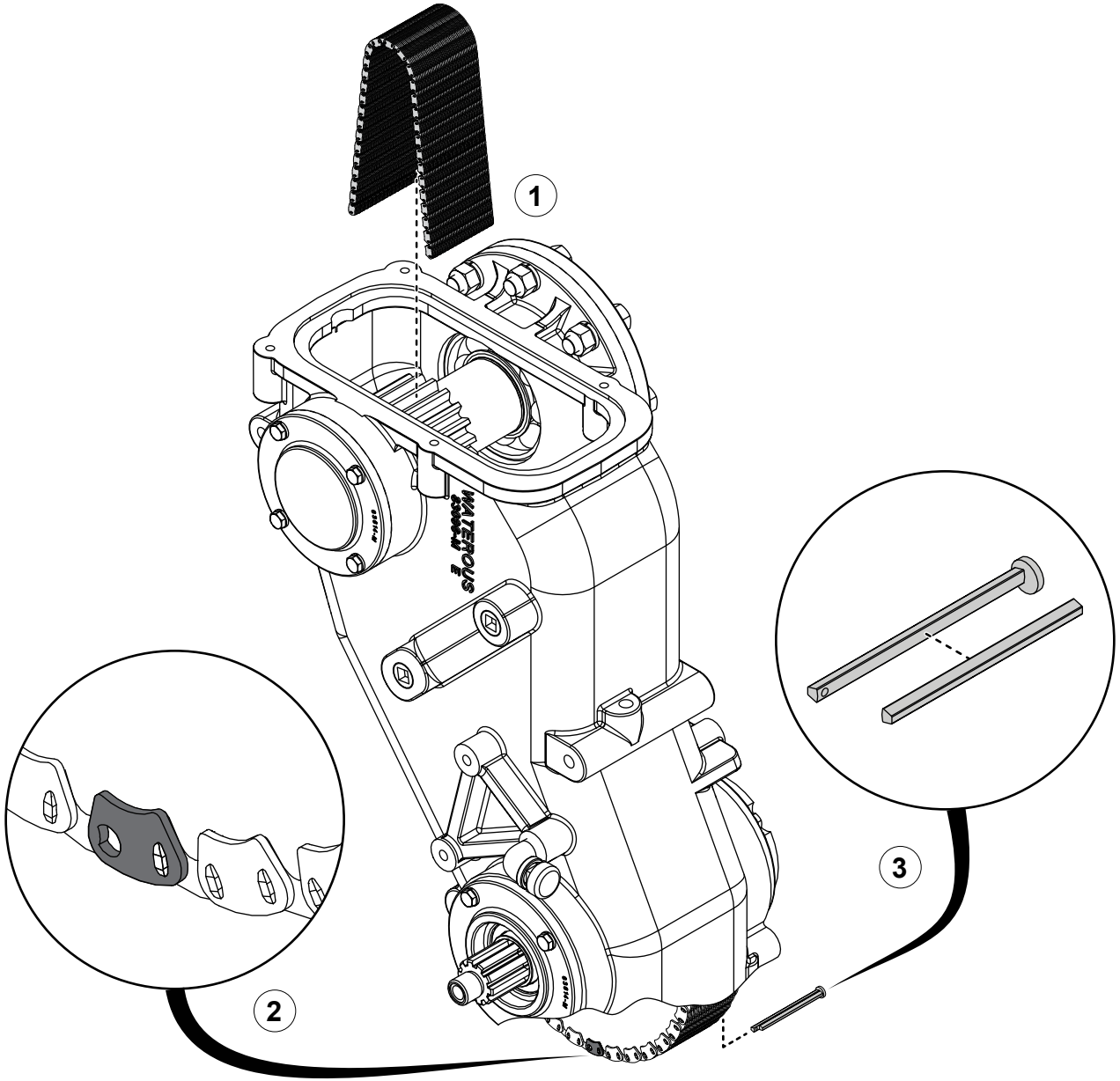

Use the illustrations and instructions to install and connect the chain.

1	Install the chain around the driven sprocket inside the chain case.
2	Overlap the chain ends around the drive sprocket.
3	Position the axle pivot and rolling pivot together, then push them through the connecting link.

Installing the Chain

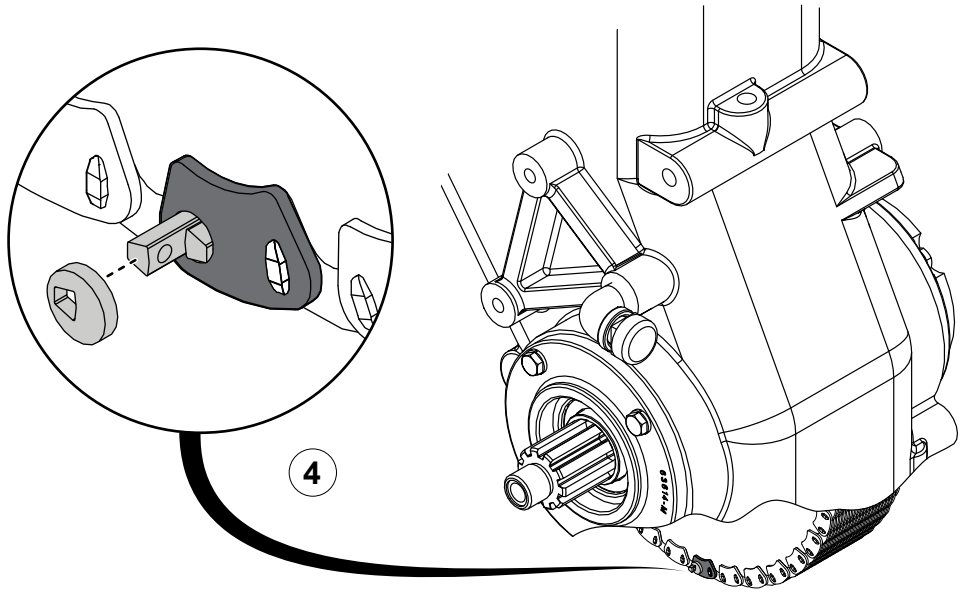

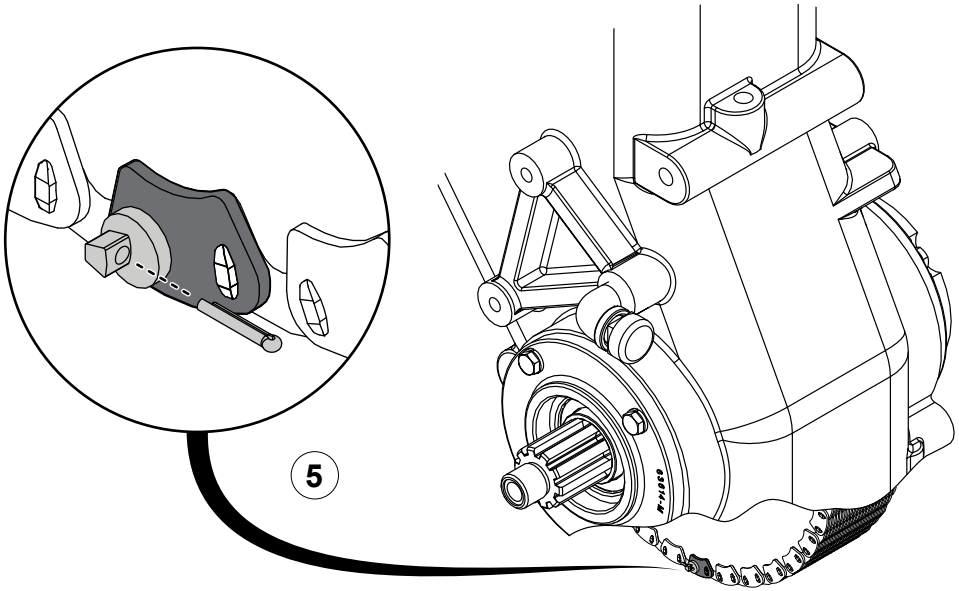

Use the illustrations and instructions to install and connect the chain.

4	Press the rivet disk onto the axle pivot.
5	Secure the connecting pin set with the cotter pin.

Installing the Bottom Pan

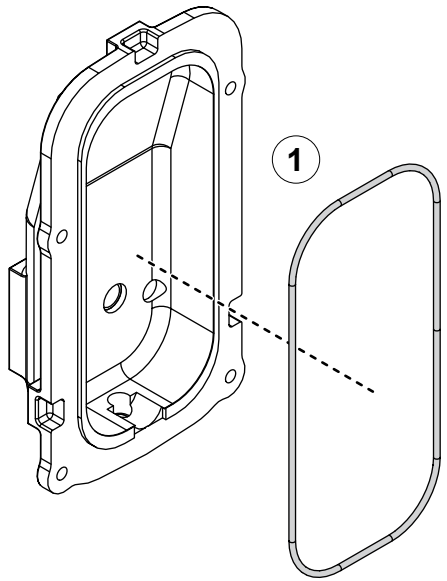

Use the illustrations and instructions to install the bottom pan.

1	Apply lubricant to the O-ring, then install it around the bottom pan.
2	Use the hardware that you removed earlier to install the bottom pan.

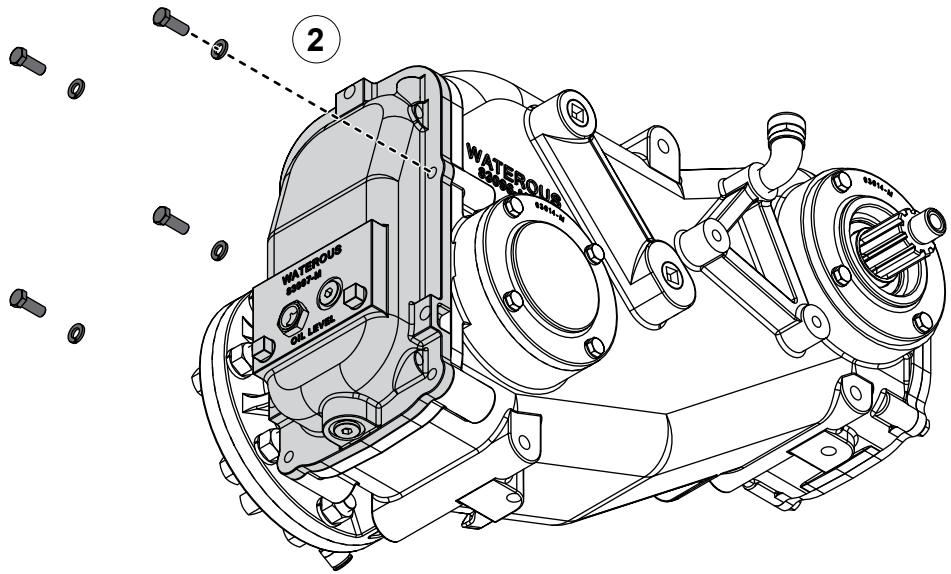

Installing the Top Cover

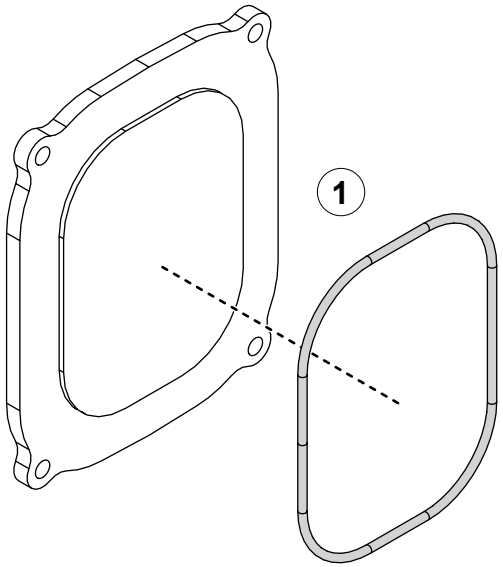

Use the illustrations and instructions to install the top cover.

1	Apply lubricant to the O-ring, then install it around the top cover.
2	Use the hardware that you removed earlier to install the top cover.

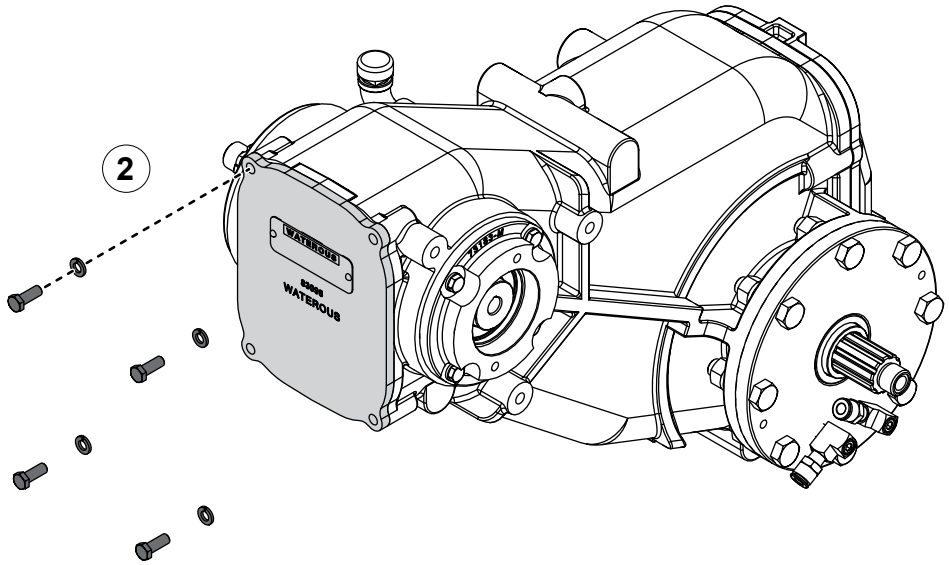

Installing the Input-Side End Yoke

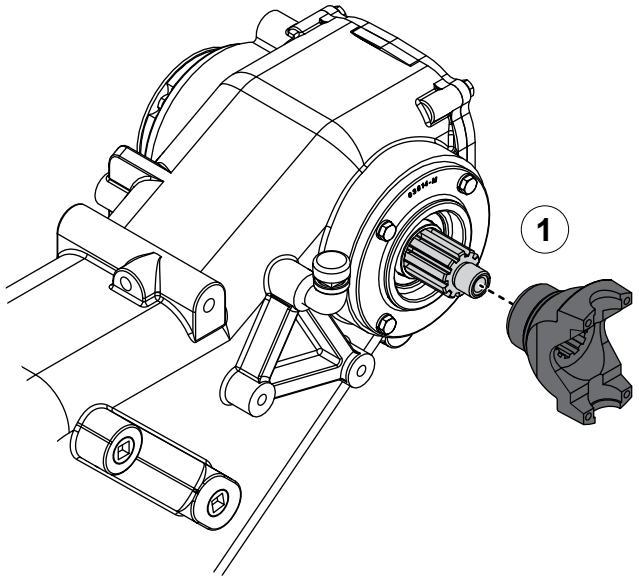

425 ft-lb
(576 N·m)

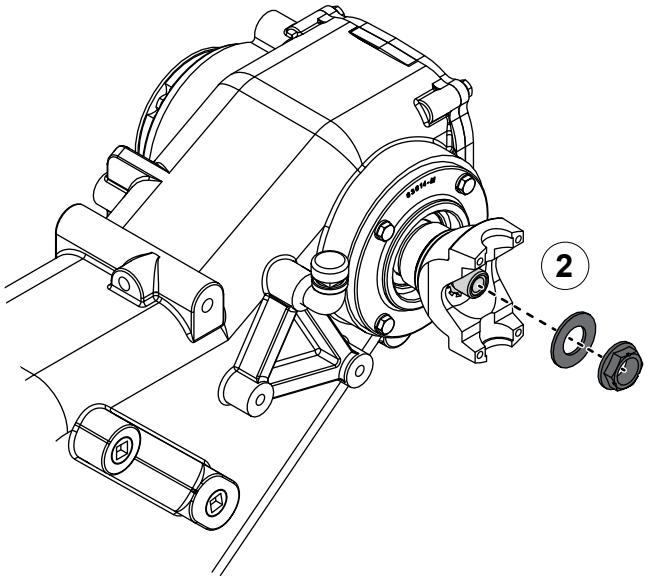

Use the illustrations and instructions to install the end yokes.

1. Apply grease to the drive shaft, then install the end yoke onto the shaft.
2. Apply anti-seize to the locknut threads, then install the washer and locknut onto the shaft.

Installing the Output-Side End Yoke

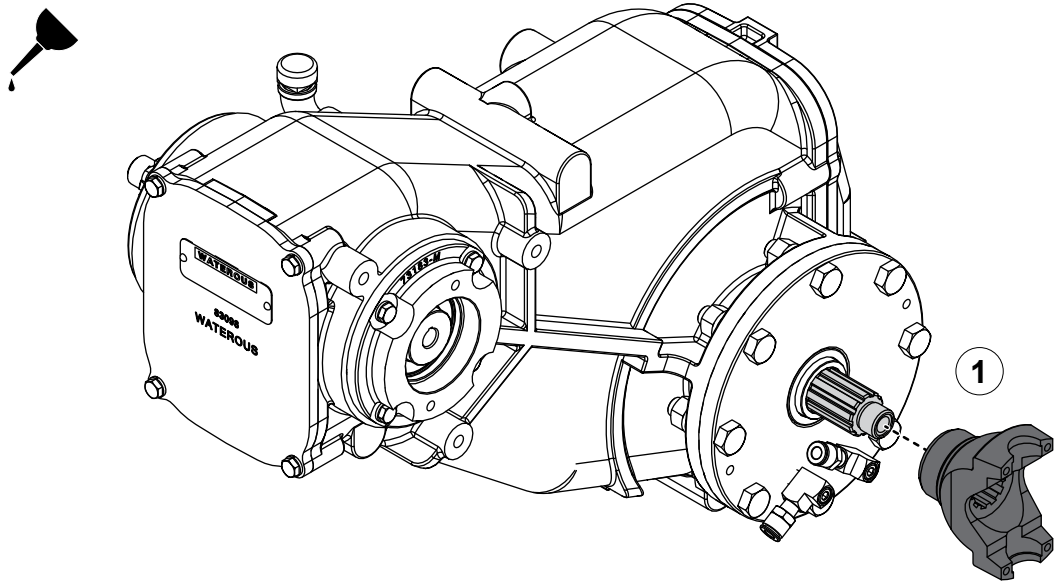

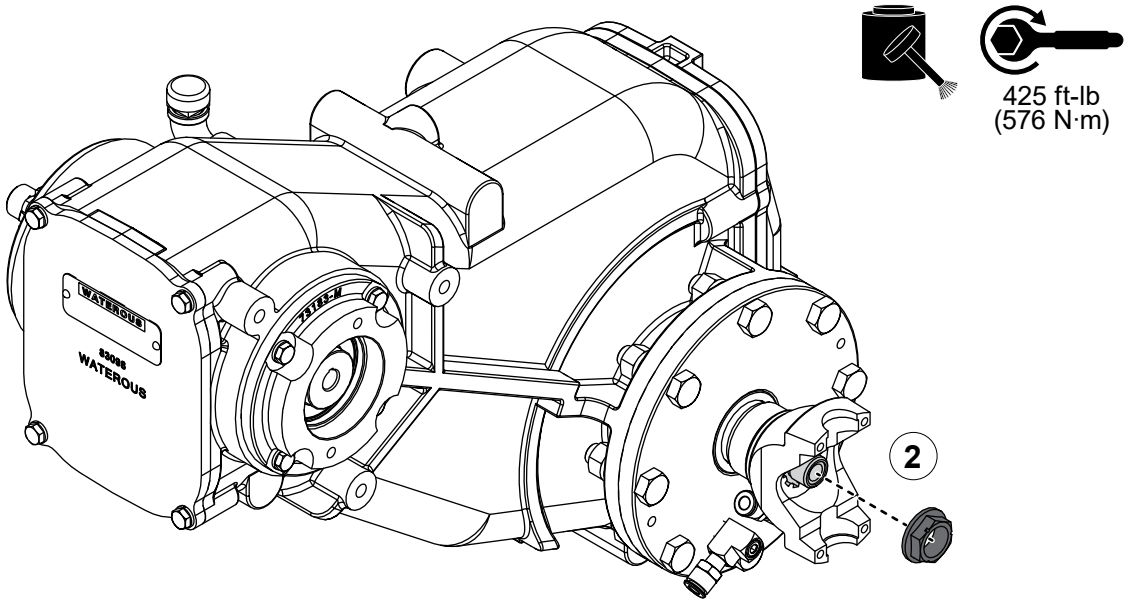

Use the illustrations and instructions to install the end yoke on the output side of the chain case.

1. Apply grease to the driven shaft, then install the end yoke onto the shaft.
2. Apply anti-seize to the locknut threads, then install the locknut onto the shaft.

Adding Oil to the Power Take-Off

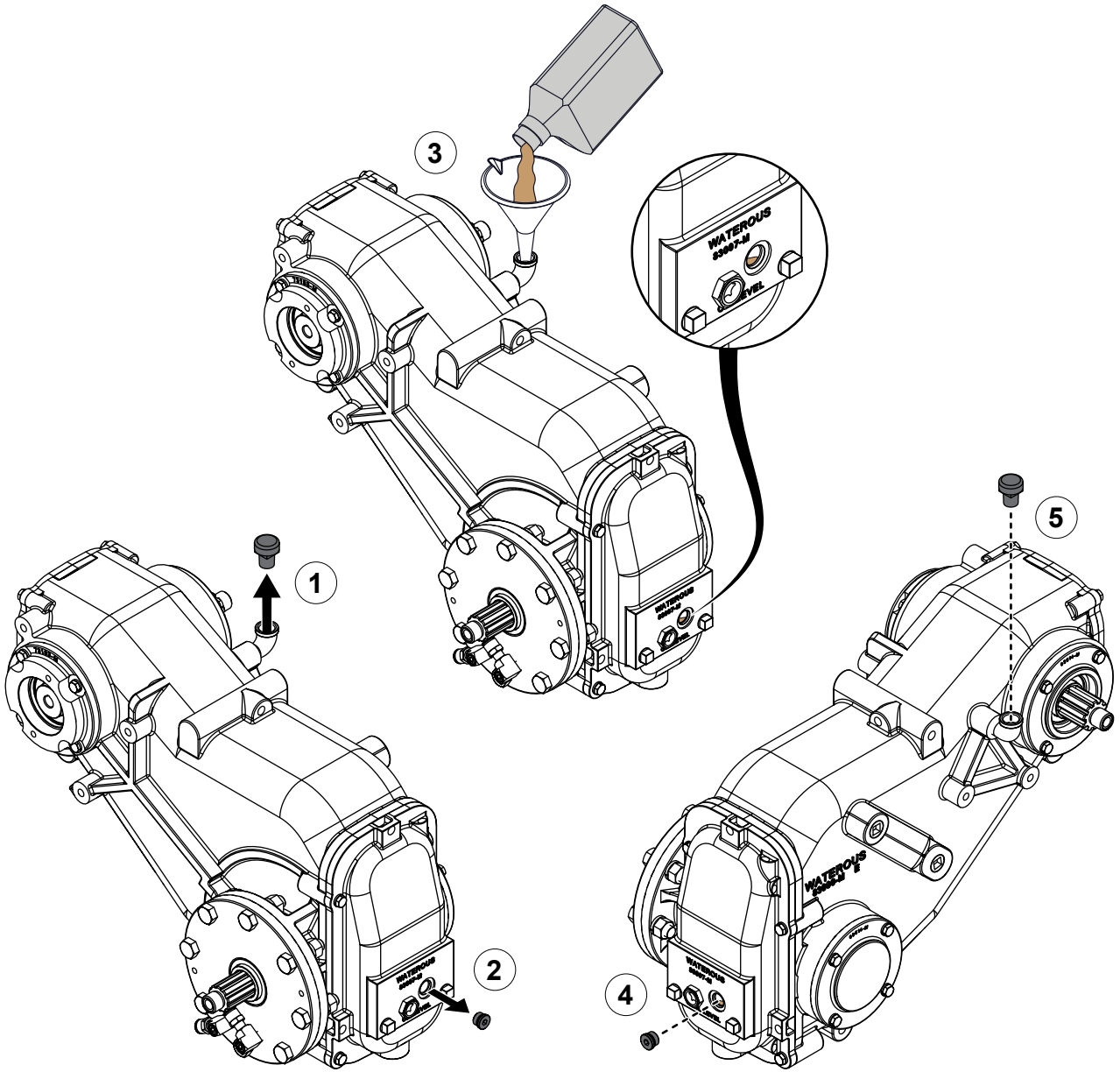

Use the illustrations and instructions to add oil to the power take-off.

Note: *Refer to the documentation provided with your equipment to determine the correct type and amount of lubricant for your application.*

1	Remove the breather.
2	Remove the oil level plug.
3	Add oil to the PTO. ***Note:*** *After pouring some oil into the case, allow it to settle before adding more to avoid over-filling.*
4	Install the oil level plug. ***Note:*** *Make sure that you do not over-tighten the oil level plug.*
5	Install the breather. ***Note:*** *Make sure that you do not over-tighten the breather.*

Notes

WATEROUS

Waterous Company
125 Hardman Avenue South
South Saint Paul, MN 55075
(651) 450-5000
www.waterousco.com