WATEROUS

Document Number	Issue Date	Rev. Date
DPL83848	5/18/2020	01/31/23

CX Series Fire Pump Dimensional Drawings
Pump Models: CXN, CXS, and CXV

Feature				See Page		
				CXN	CXS	CXV
Basic Pump without Transmission	Body Dimensions			3-4	5-6	7-8
	Optional Discharge Arrangments	Blank (4 in. ANSI Flange)				
		Manifold	With 3-1/2 in. End Flanges	9		
			With 4 in. End Flanges	10		
Pump with Transmission				See Table on Page 2		

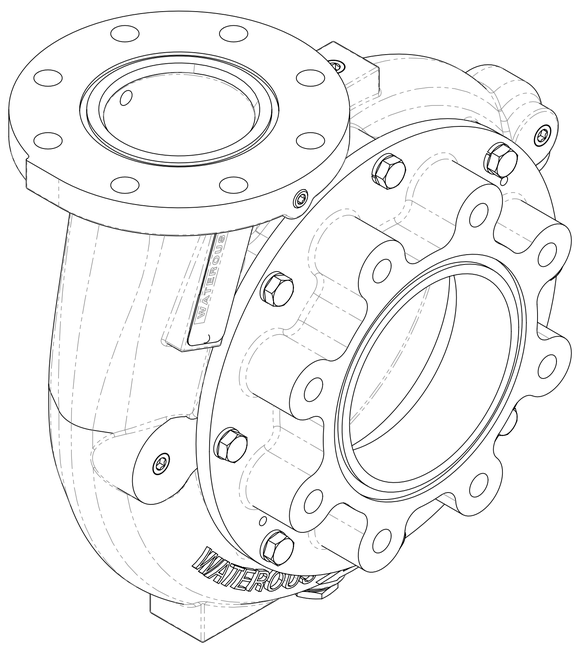

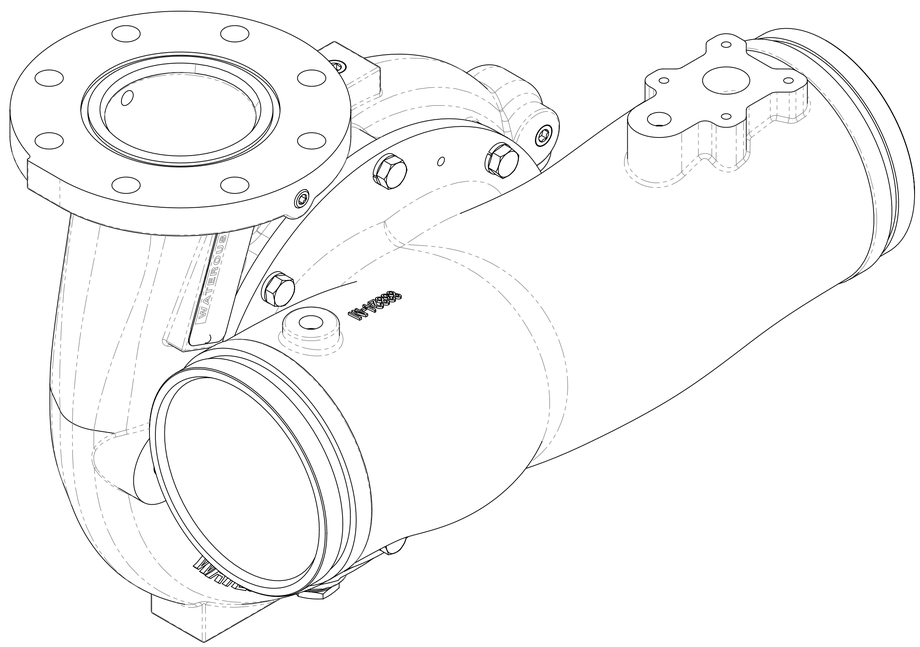

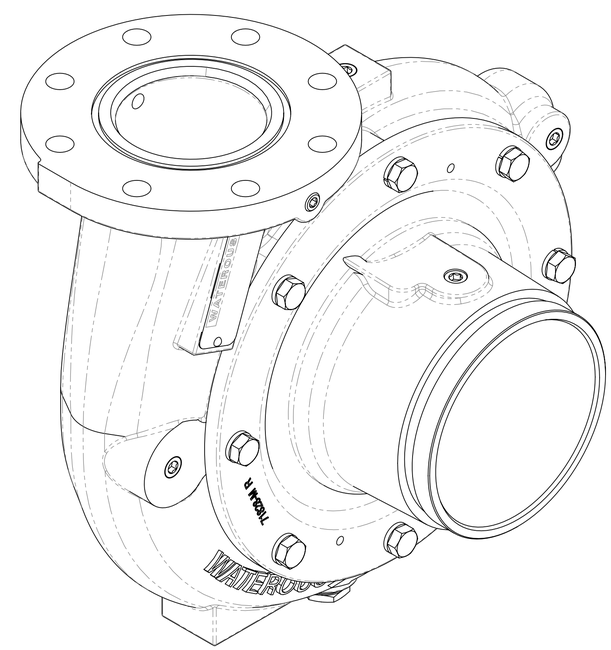

Note: Pump must be installed in accordance with Waterous Installation Instructions.

Transmission				Pump					See Page					
Type	Driveline	Pump Mounting on Transmission	Input Rotation (1)	Impeller Rotation (2)	Pump and Transmission Model			Hydraulic Pump Mounting Provision	Pump and Transmission			Optional Discharge Manifold Mounting on Pump		
					CXN	CXS	CXV		Dimensions	Available		3-1/2 in. End Flanges	4 in. End Flanges	
										Pump Discharge Positions	Transmission Mounting Positions	Perpendicular to Intake	Perpendicular to Intake	Parallel to Intake
C20 Series Chain Drive, Split Shaft	Input and Output Shaft	Front (Input Shaft Side)	CW	CW	CXNC20C CXNC20D CXNC20E CXNC20F	CXSC20C CXSC20D CXSC20E CXSC20F	CXVC20C CXVC20D CXVC20E CXVC20F	No	11, 17	25	27	28	29	30
								Yes	12, 17	25	27			
	Input Shaft Only	Front (Input Shaft Side)	CW	CW	CXNC20C CXNC20D CXNC20E CXNC20F	CXSC20C CXSC20D CXSC20E CXSC20F	CXVC20C CXVC20D CXVC20E CXVC20F	No	13, 17	25	27			
								Yes	14, 17	25	27			
	Input and Output Shaft	Rear (Output Shaft Side)	CW	CCW	CXNC20C CXNC20D CXNC20E CXNC20F	CXSC20C CXSC20D CXSC20E CXSC20F	CXVC20C CXVC20D CXVC20E CXVC20F	N/A	15, 17	25	27	31	32	33
	Input Shaft Only	Rear (Output Shaft Side)	CW	CCW	CXNC20C CXNC20D CXNC20E CXNC20F	CXSC20C CXSC20D CXSC20E CXSC20F	CXVC20C CXVC20D CXVC20E CXVC20F	N/A	16, 17	25	27			
K Series Two Gear, PTO Driven	Input Shaft Only	Opposite Input Shaft	CW	CW	CXNK	CXSK	CXVK	N/A	18	25	26	28	29	30
			CCW	CCW	CXNK	CXSK	CXVK	N/A	18	25	26	31	32	33
T Series Two Gear, Direct Engine Mount	Input Shaft Only	Opposite Input Shaft	CW	CW	CXNT	CXST	CXVT	N/A	19	25	26	28	29	30
			CCW	CCW	CXNT	CXST	CXVT	N/A	19	25	26	31	32	33
P Series Chain Drive, PTO Driven	Input Shaft Only	Input Shaft Side	CW	CW	CXNPA	CXSPA	CXVPA	No	20	25	27	28	29	30
								Yes	21					
QB Series Chain Drive, PTO Driven	Input Shaft Only	Front (Input Shaft Side)	CW	CW	N/A	N/A	CXVQB	Yes	22	25	27	N/A	N/A	N/A
		Rear (Opposite Input Shaft)	CW	CCW	N/A	N/A	CXVQB	Yes	23					
D Series Directly from a PTO	Input Shaft Only	Opposite Input Shaft	CW	CCW	CXND	CXSD	CXD	N/A	24	25	N/A	31	32	33
			CCW	CW	CXND	CXSD	CXD	N/A	24	25	N/A	28	29	30

Notes:
1. Input rotation is viewed looing directly at the transmission input shaft.
2. Impeller rotation is viewed looking directly at the intake fitting (impeller eye)

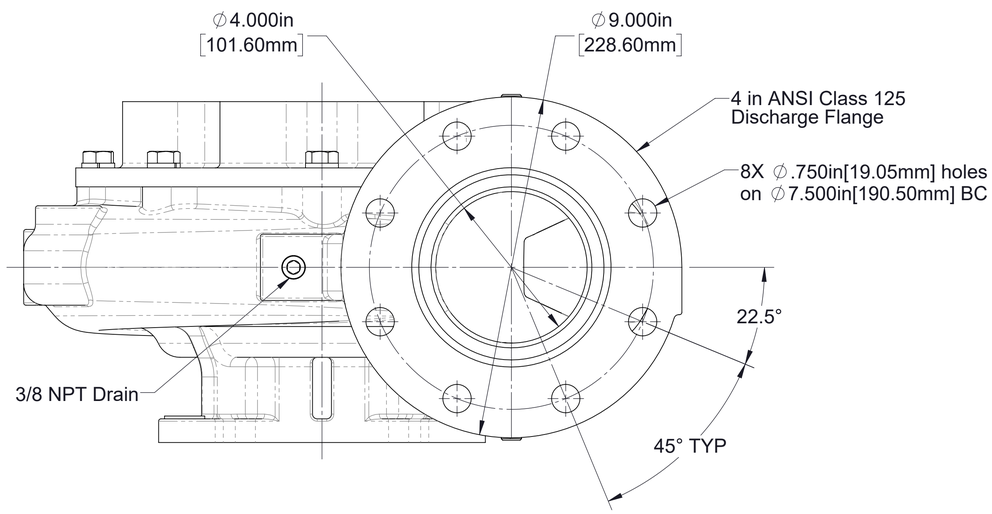

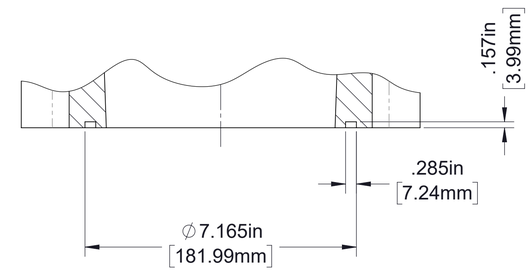

End Flange O-ring Dimensions
Use 6.125in I.D. x .210 cross-section O-ring
or order part No. W37108-6 from Waterous

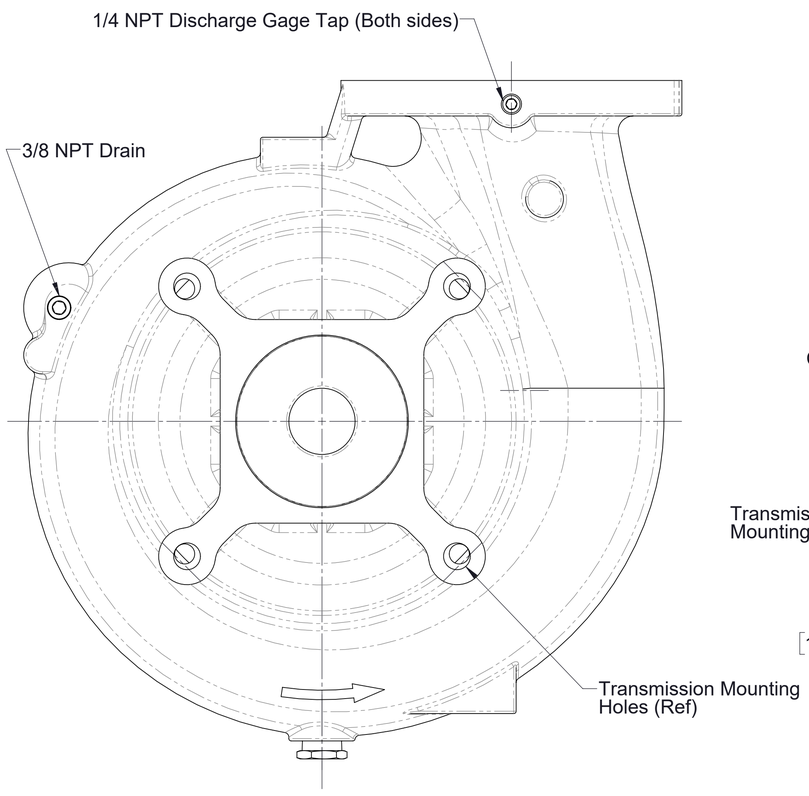

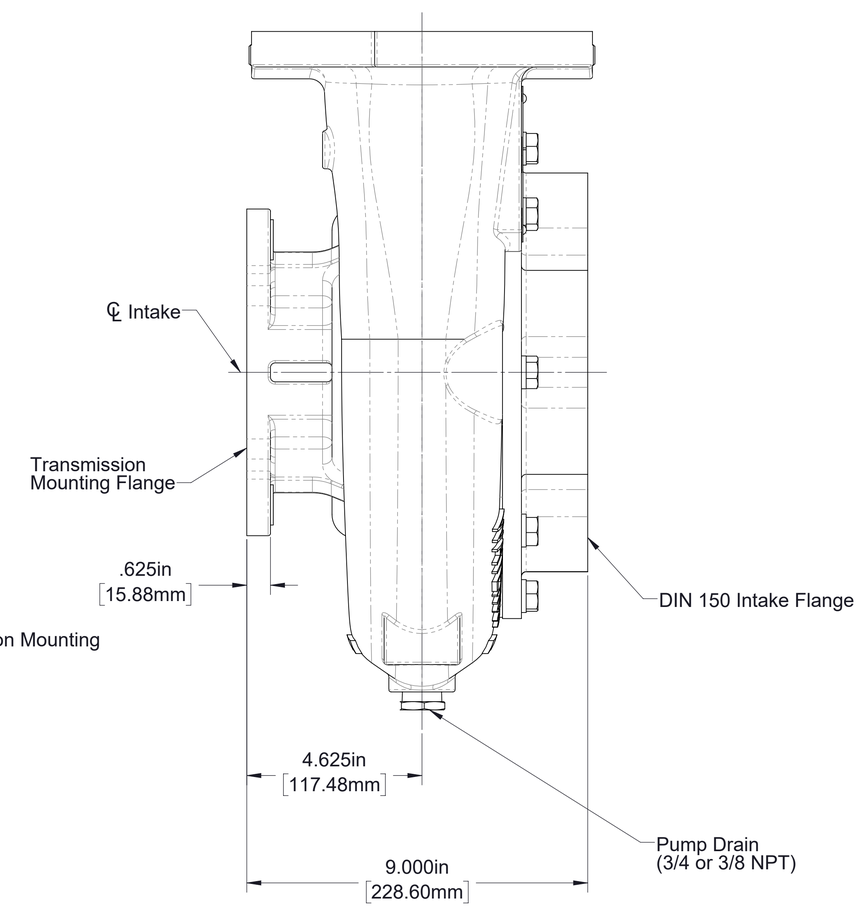

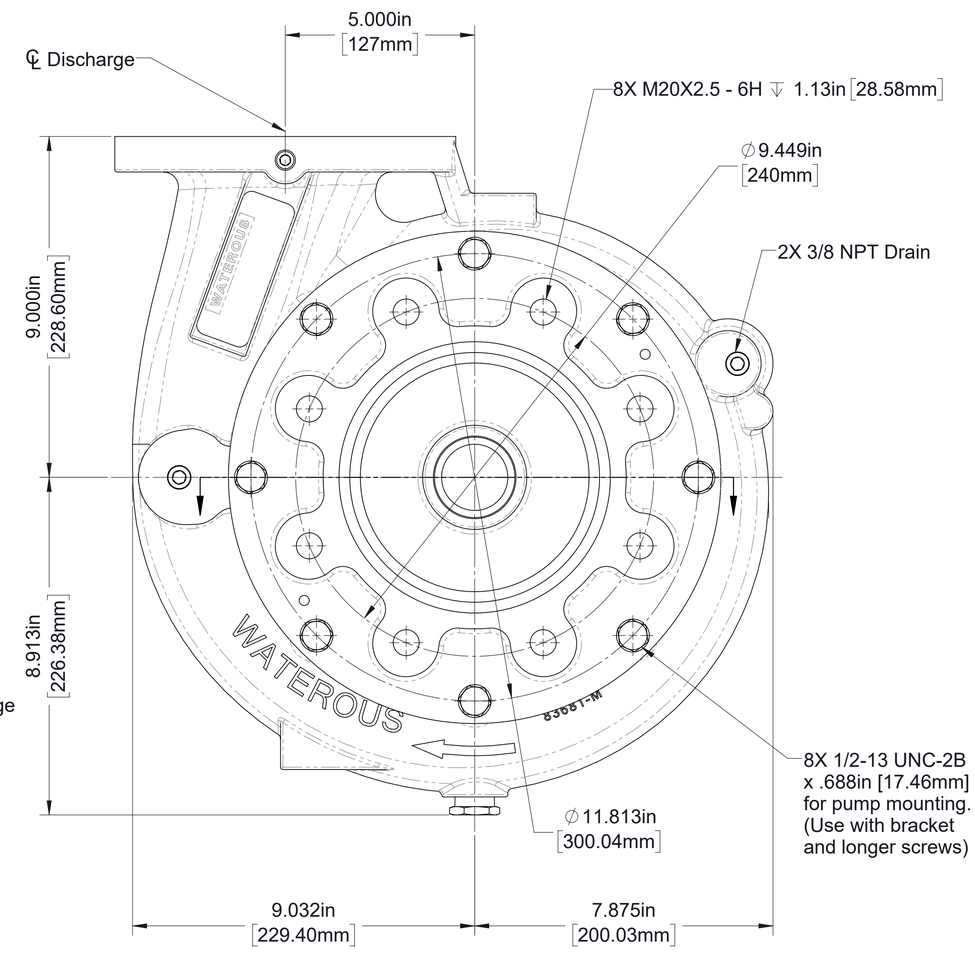

CXN Body Dimensions

CW Impeller Rotation

Shown with blank 4 in. ANSI flange discharge

See pages 9 & 10 for optional discharge manifolds

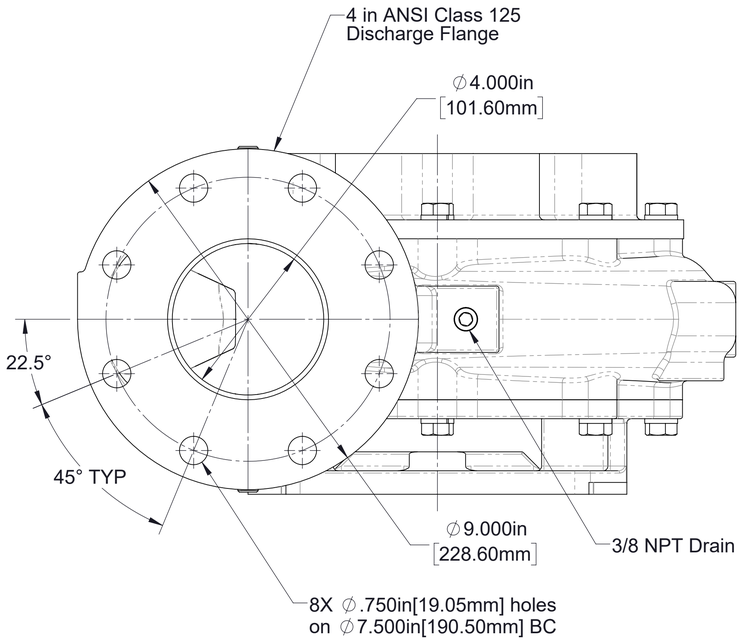

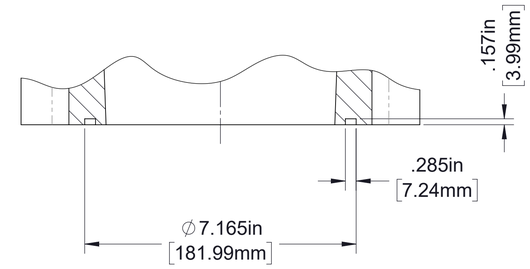

End Flange O-ring Dimensions
Use 6.125in I.D. x .210 cross-section O-ring
or order part No. W37108-6 from Waterous

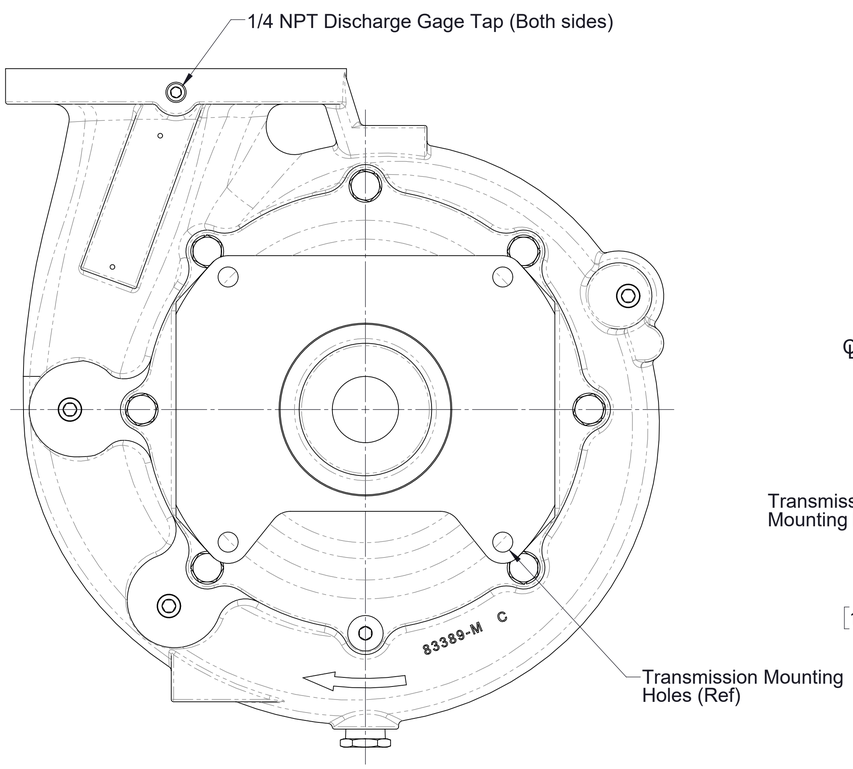

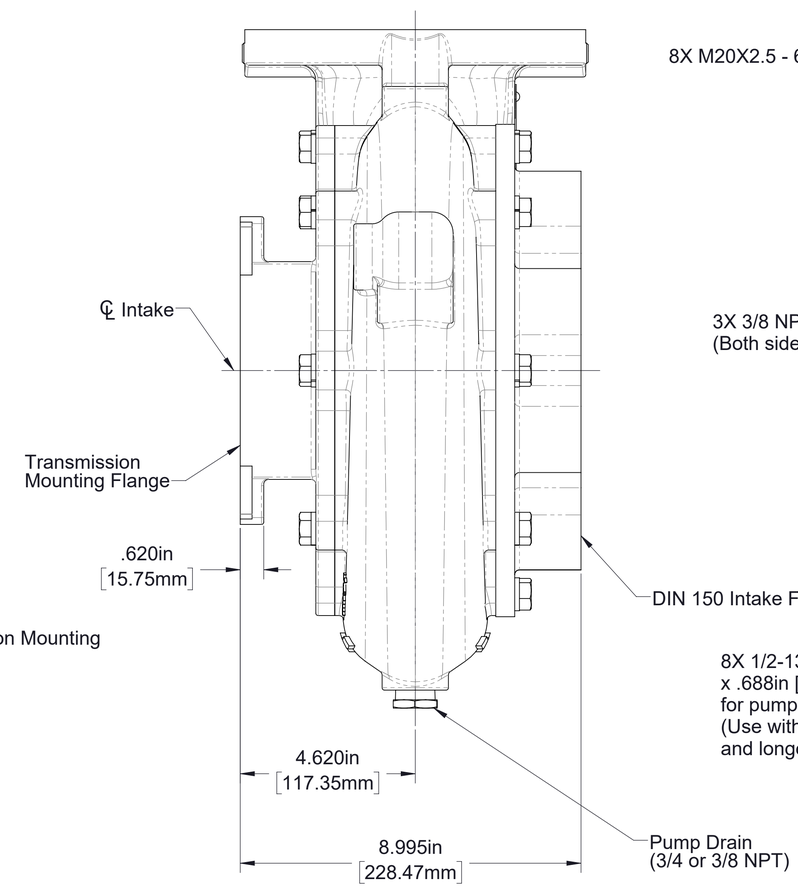

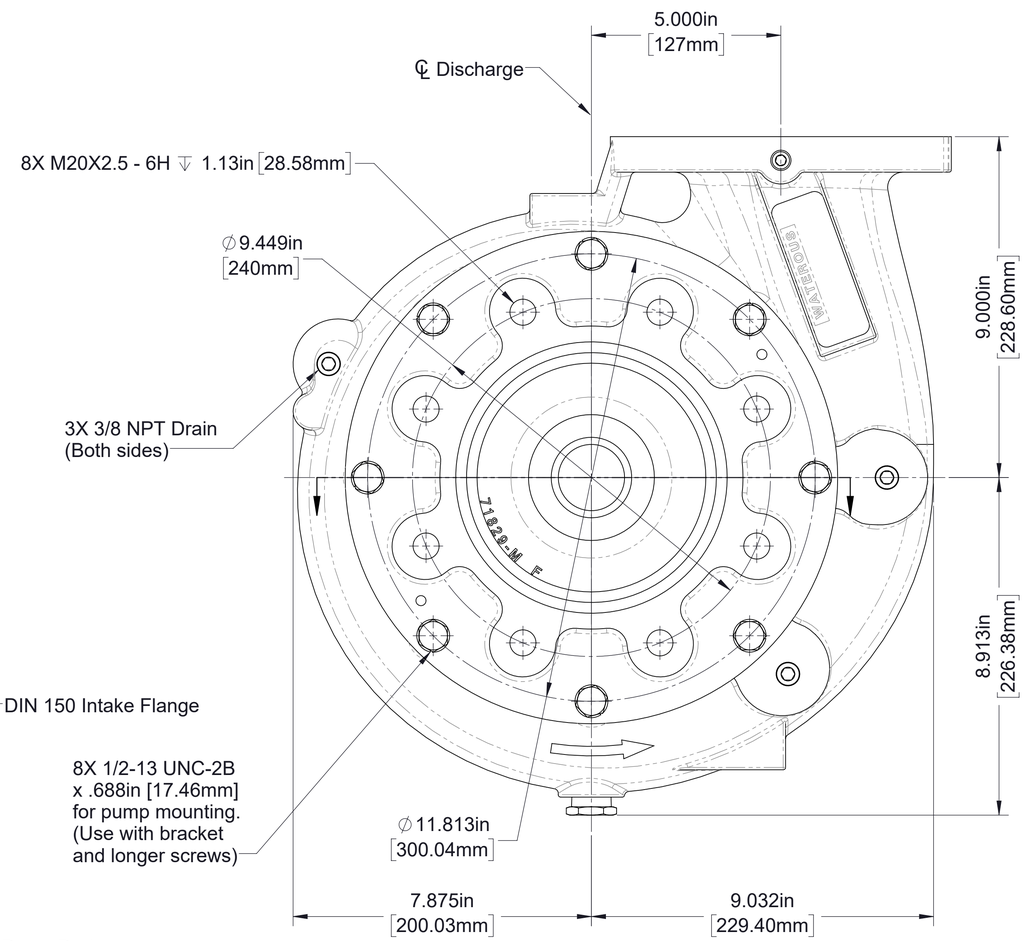

CXN Body Dimensions

CCW Impeller Rotation

Shown with blank 4 in. ANSI flange discharge
See pages 9 & 10 for optional discharge manifolds

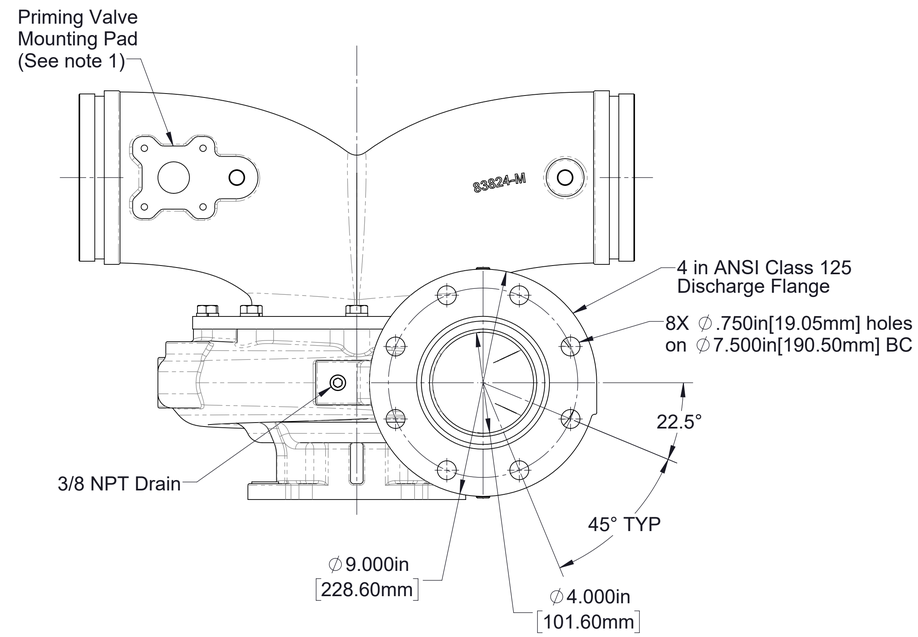

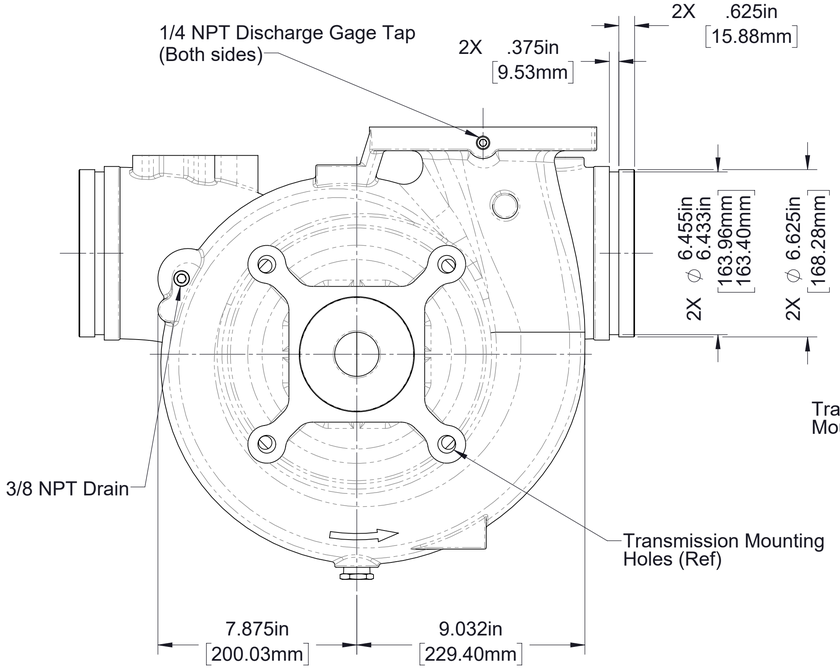

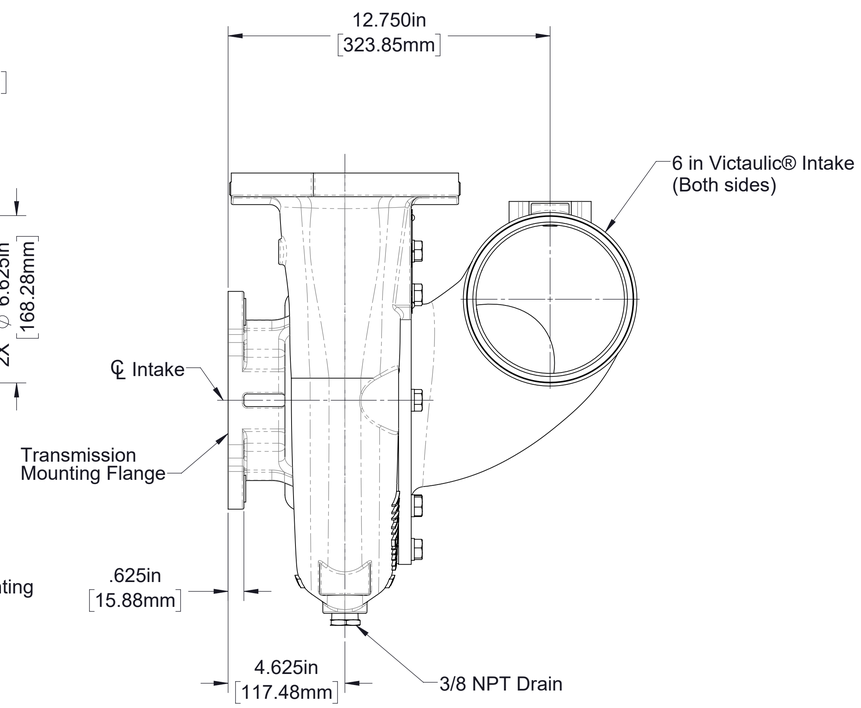

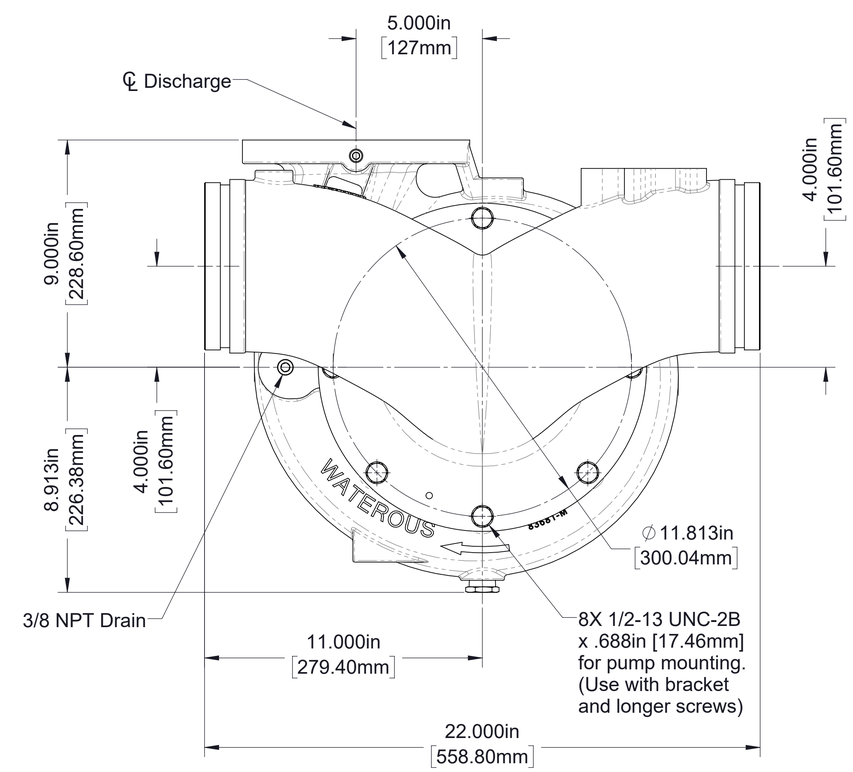

Note:
1. See drawing DPL82908 for priming valve details.

CXS Body Dimensions

CW Impeller Rotation

Shown with blank 4 in. ANSI flange discharge
See pages 9 & 10 for optional discharge manifolds

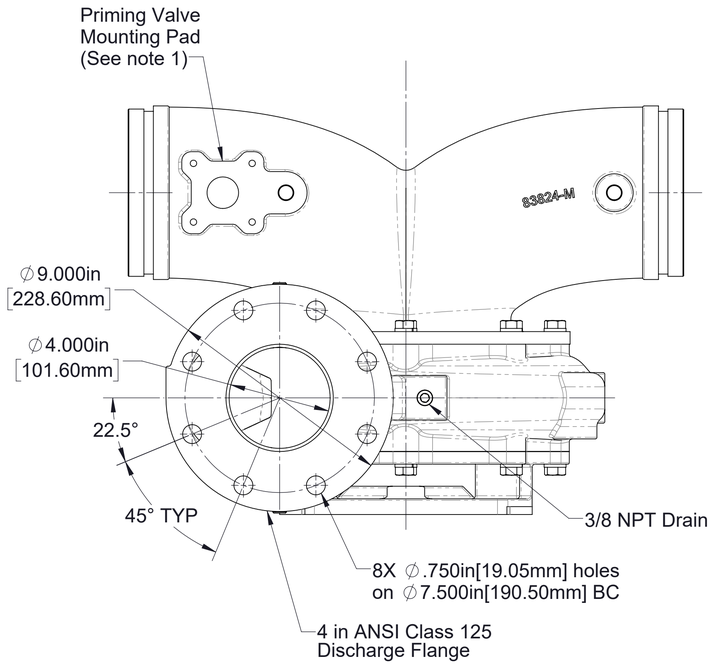

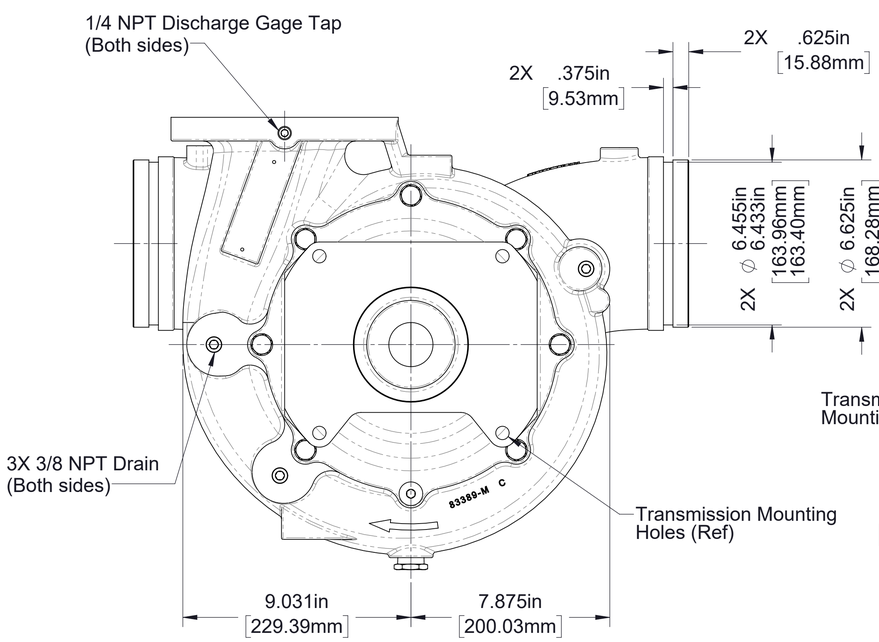

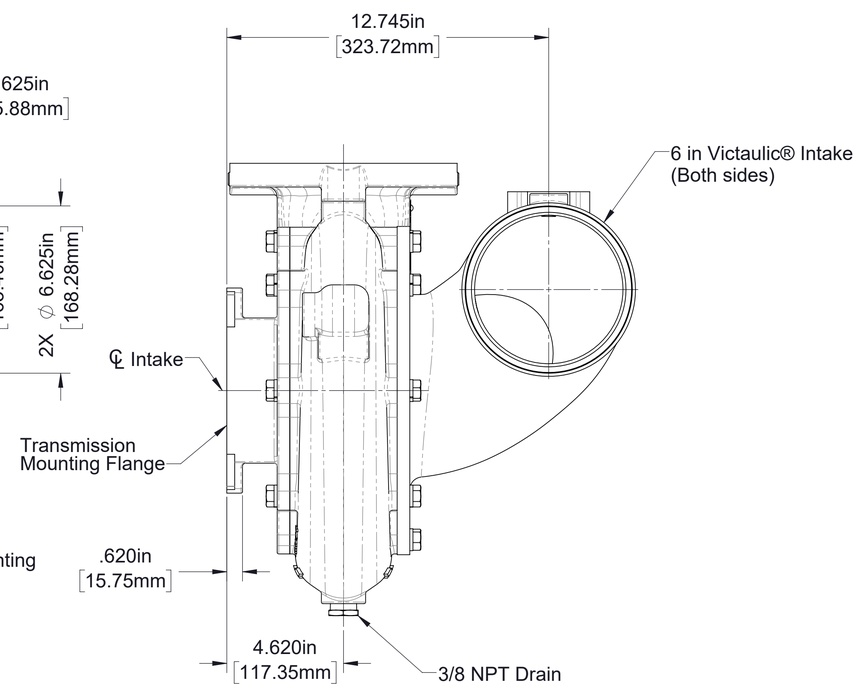

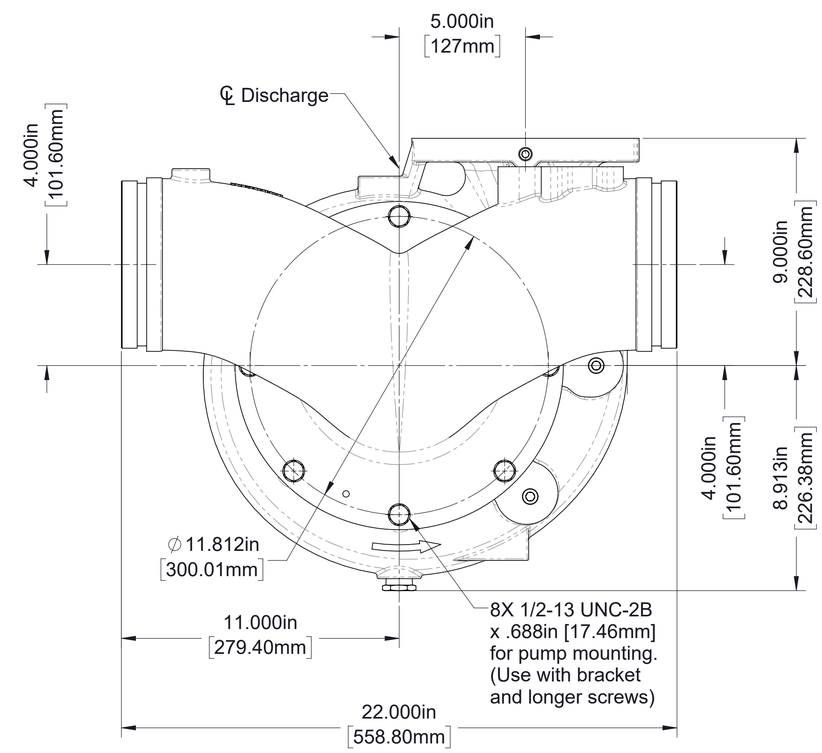

Note:
1. See drawing DPL82908 for priming valve details.

CXS Body Dimensions

CCW Impeller Rotation

Shown with blank 4 in. ANSI flange discharge

See pages 9 & 10 for optional discharge manifolds

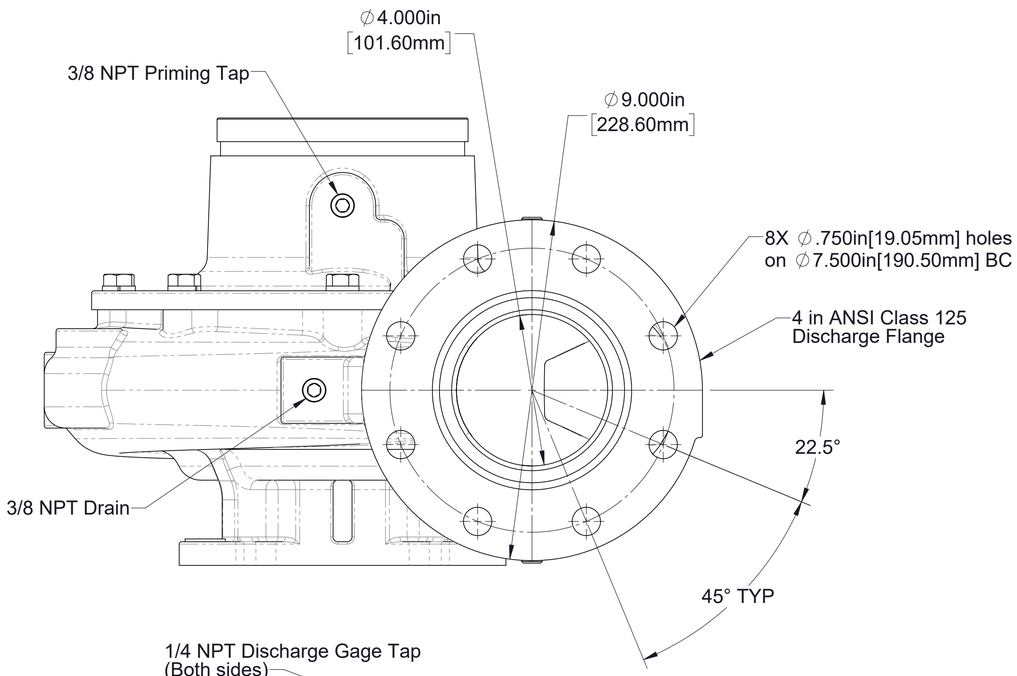

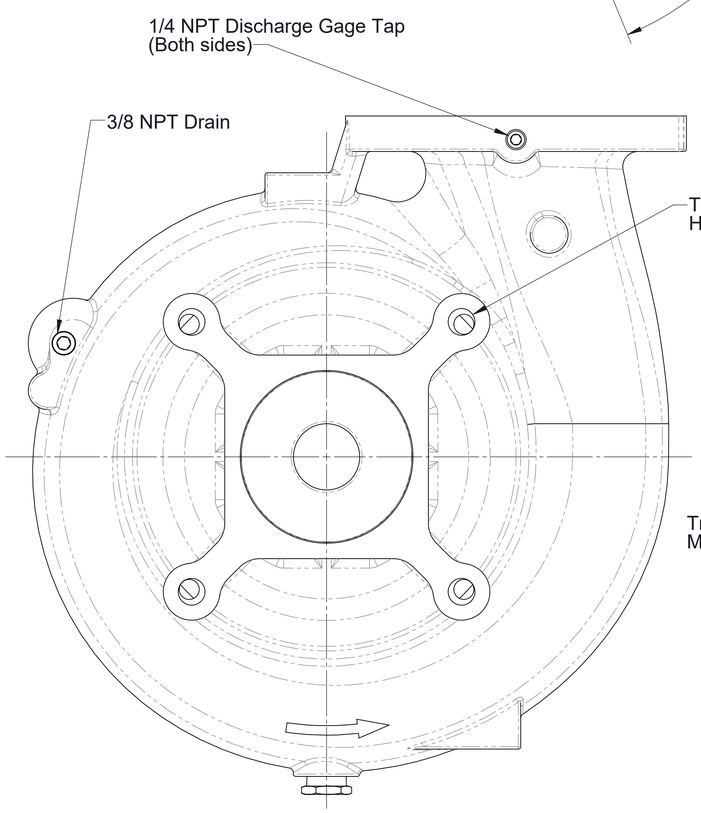

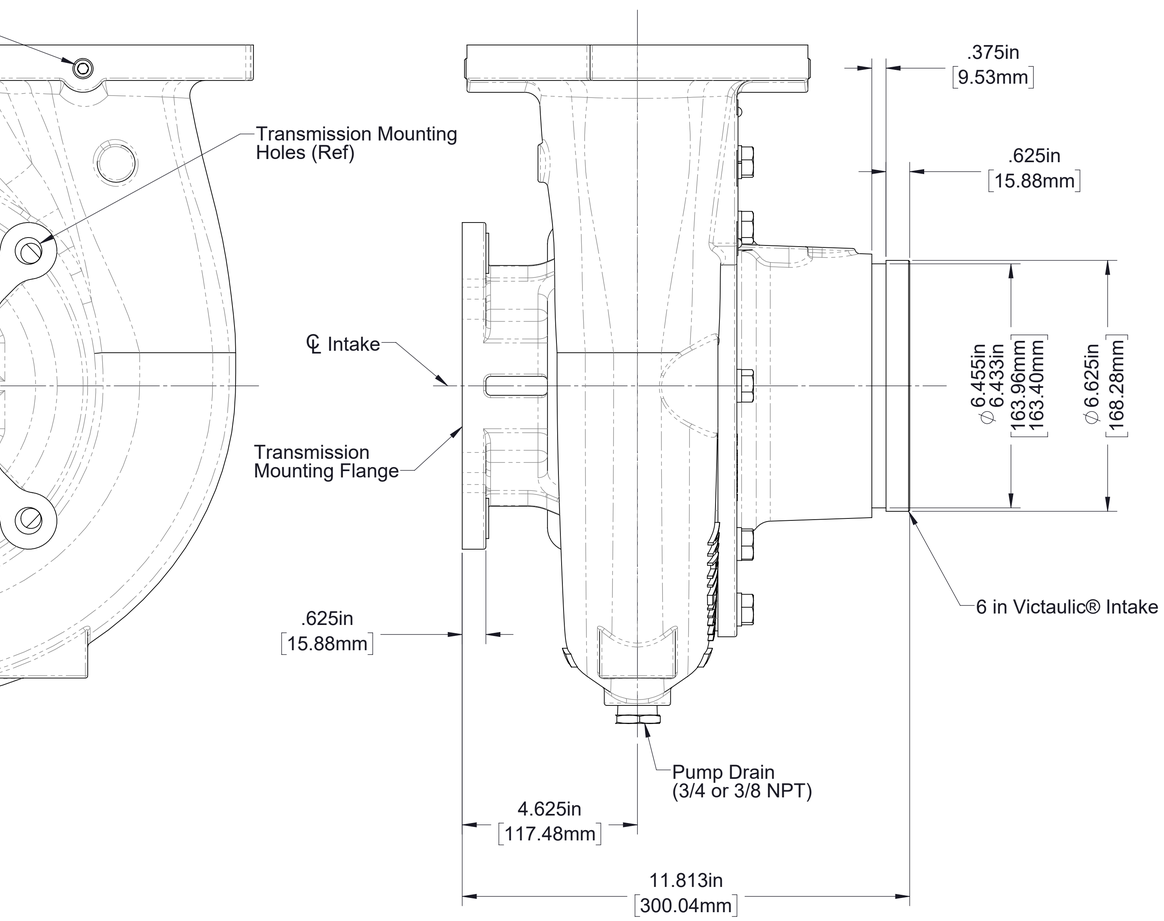

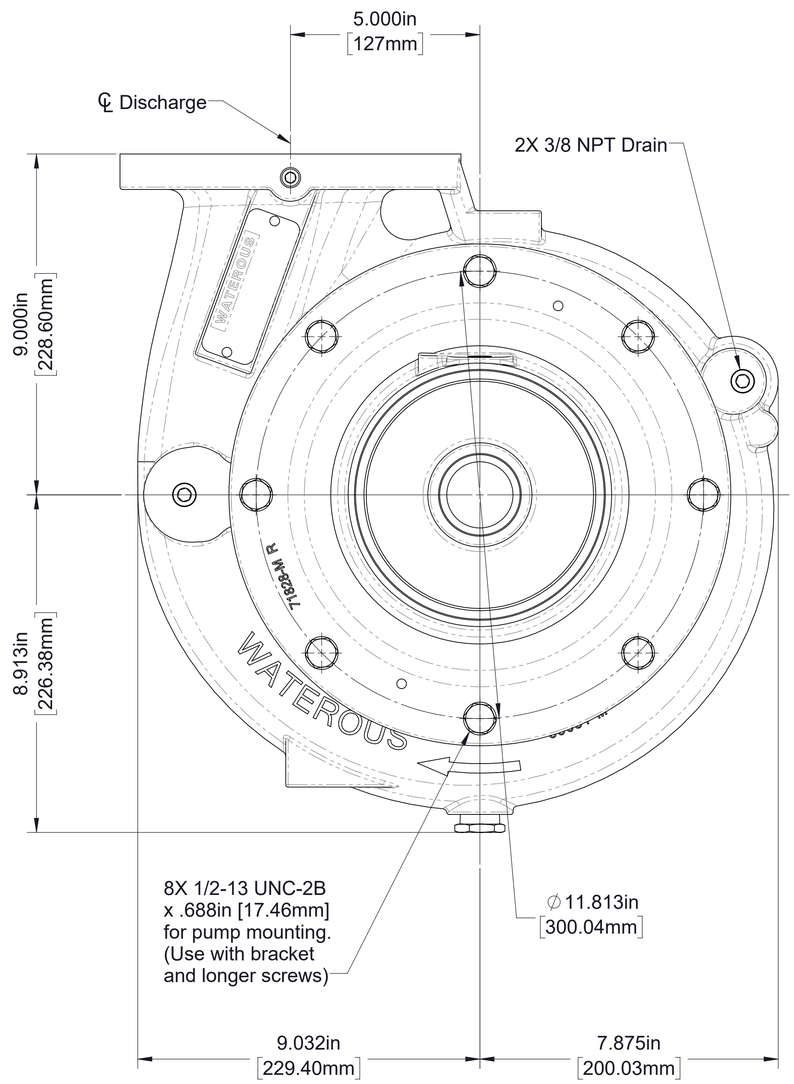

CXV Body Dimensions

CW Impeller Rotation

Shown with blank 4 in. ANSI flange discharge

See pages 9 & 10 for optional discharge manifolds

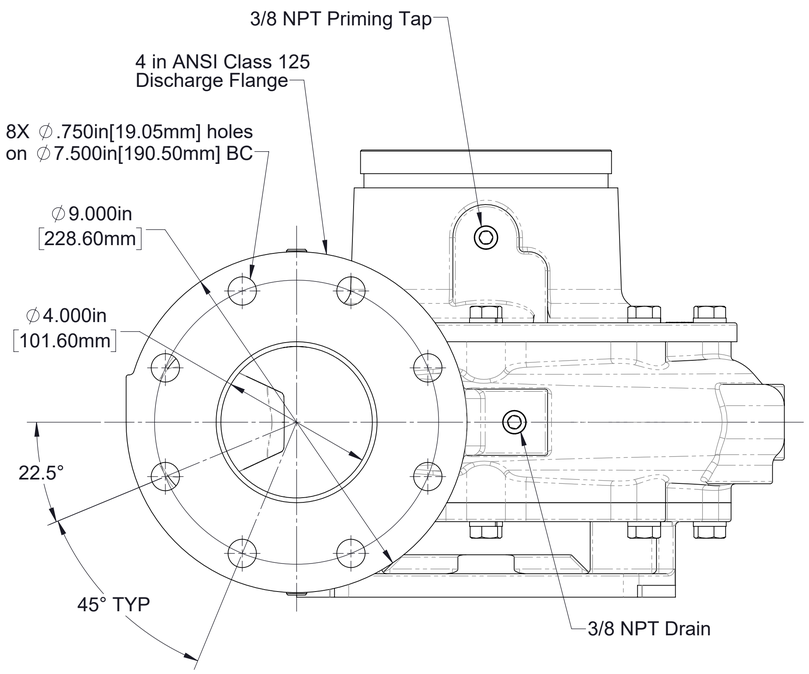

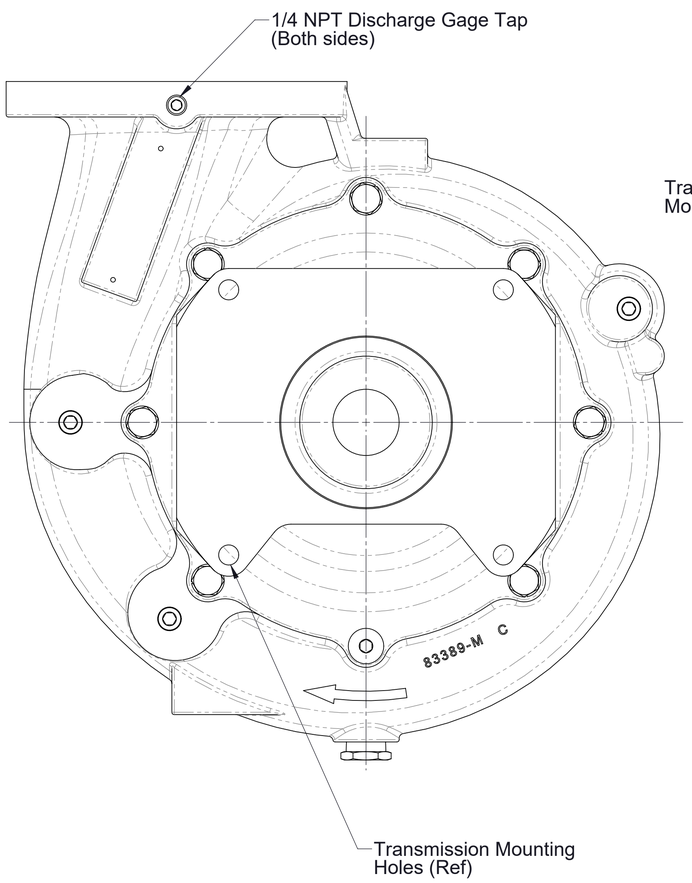

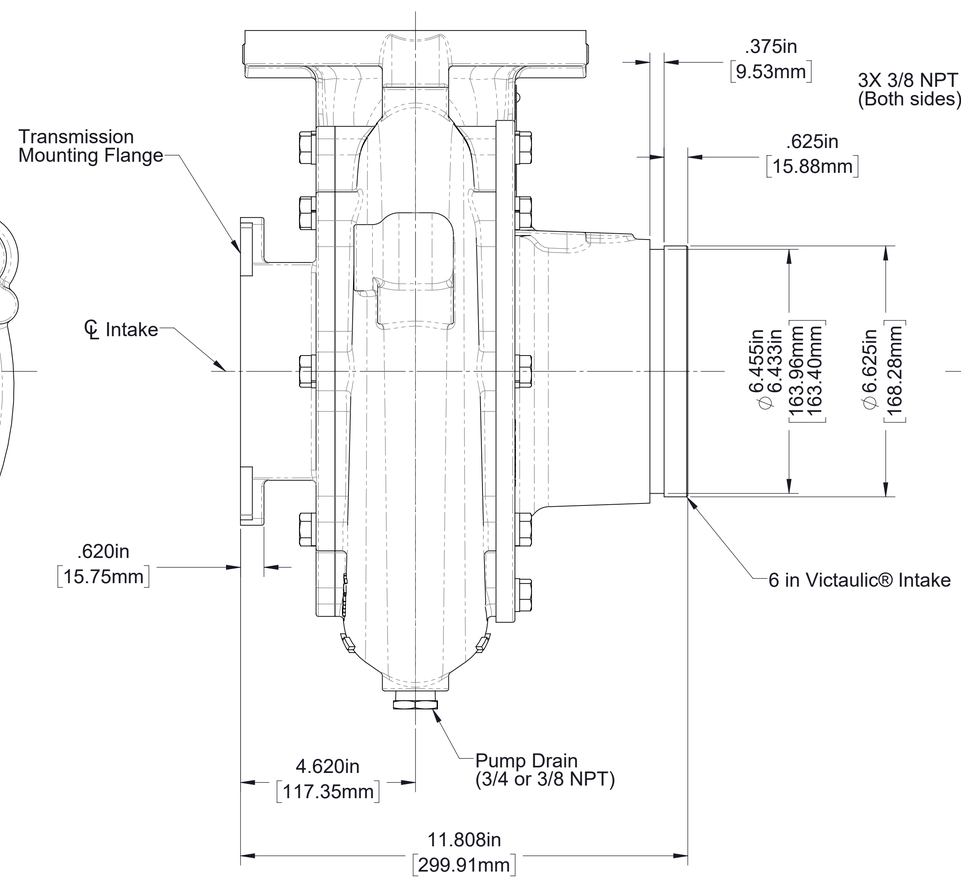

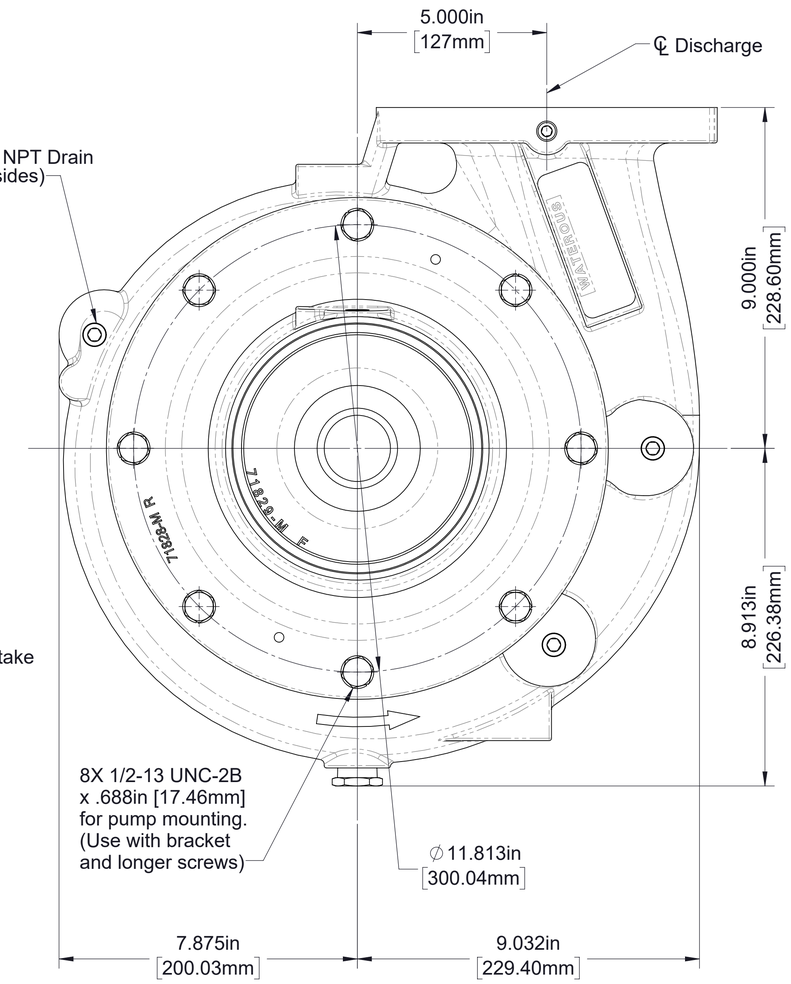

CXV Body Dimensions

CCW Impeller Rotation

Shown with blank 4 in. ANSI flange discharge

See pages 9 & 10 for optional discharge manifolds

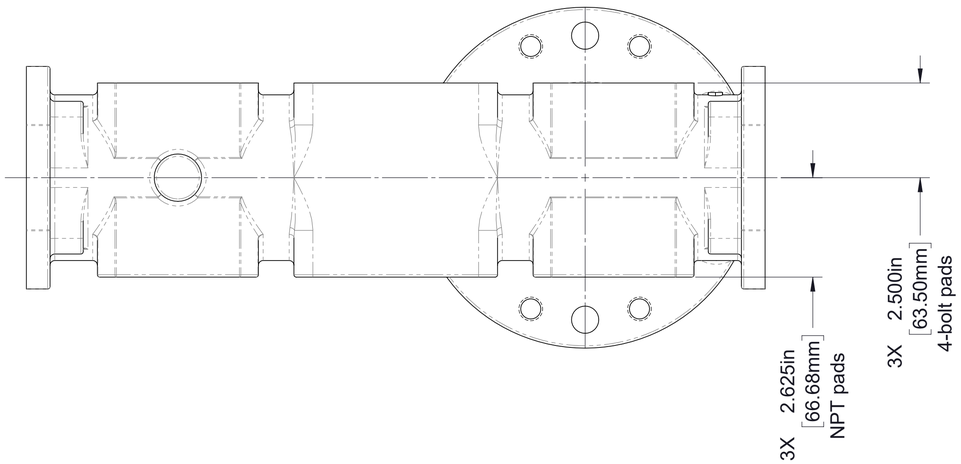

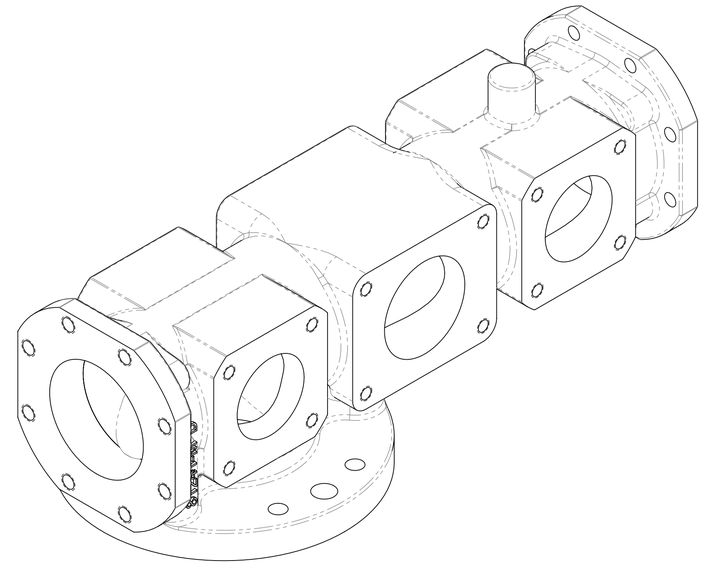

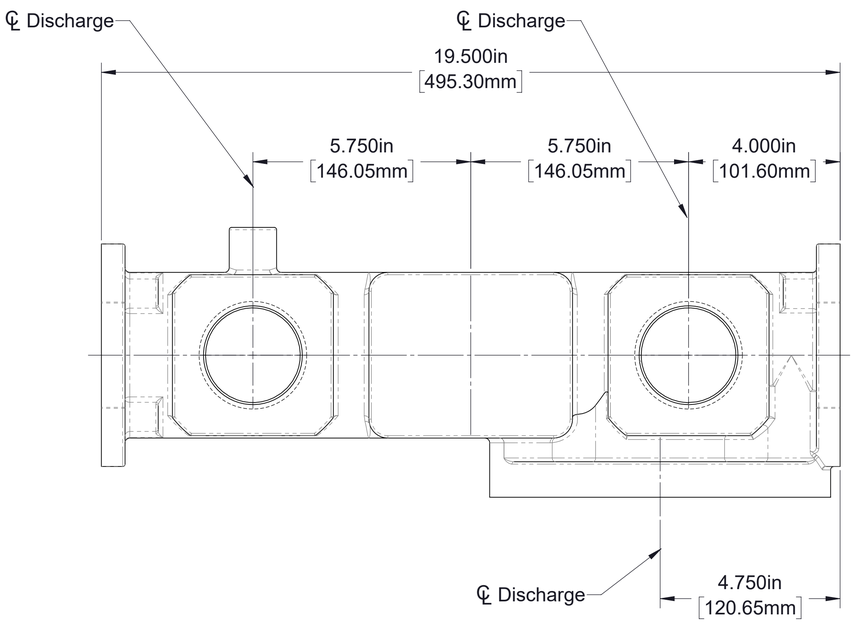

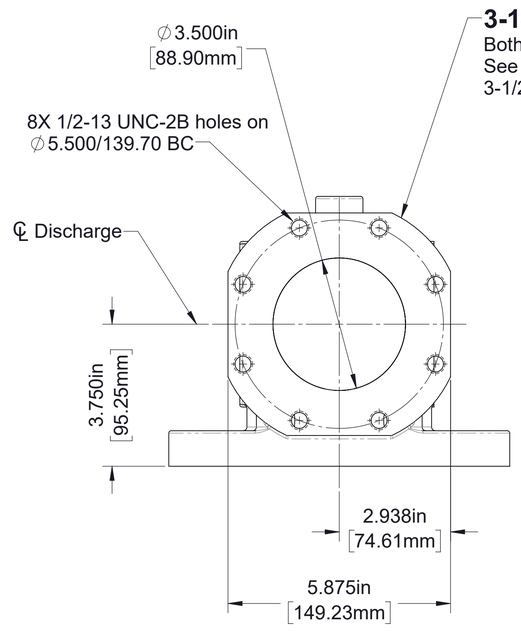

3-1/2 in 8-bolt discharge valve pad.
Both sides.
See drawing DPL82088 for informaion on ordering
3-1/2 in 8-bolt discharge fittings and valves

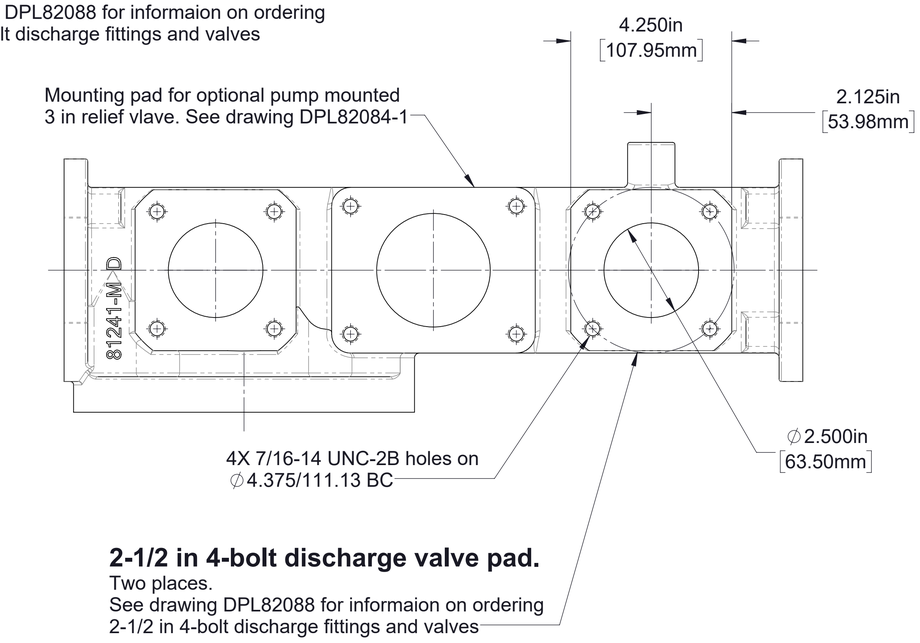

2-1/2 in 4-bolt discharge valve pad.
Two places.
See drawing DPL82088 for informaion on ordering
2-1/2 in 4-bolt discharge fittings and valves

Optional Discharge Manifold w/ 3-1/2 in End Flanges

See pages 28 and 31 for mounting details and pad designations

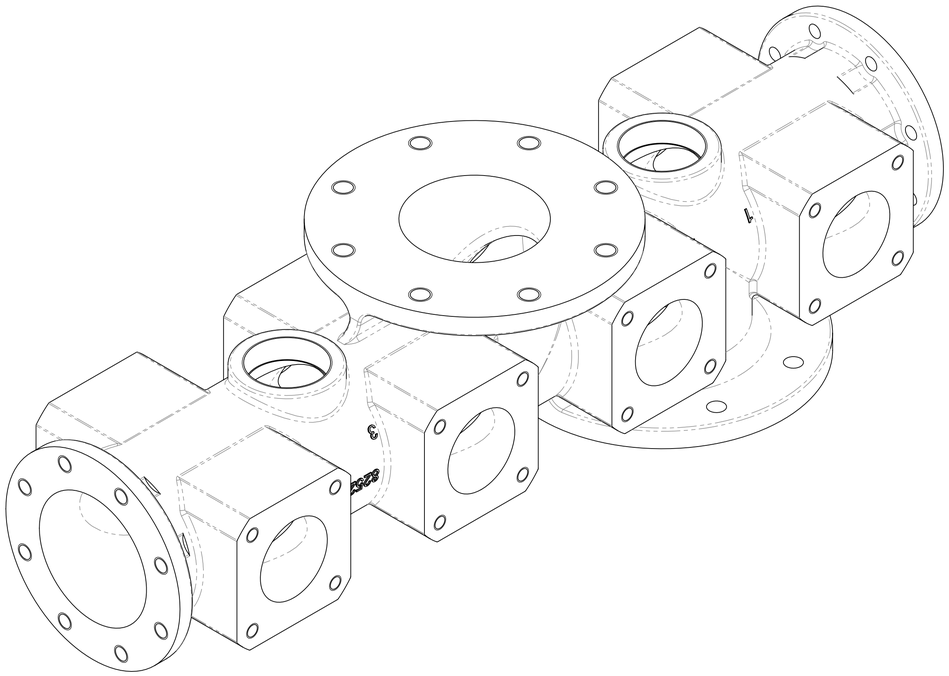

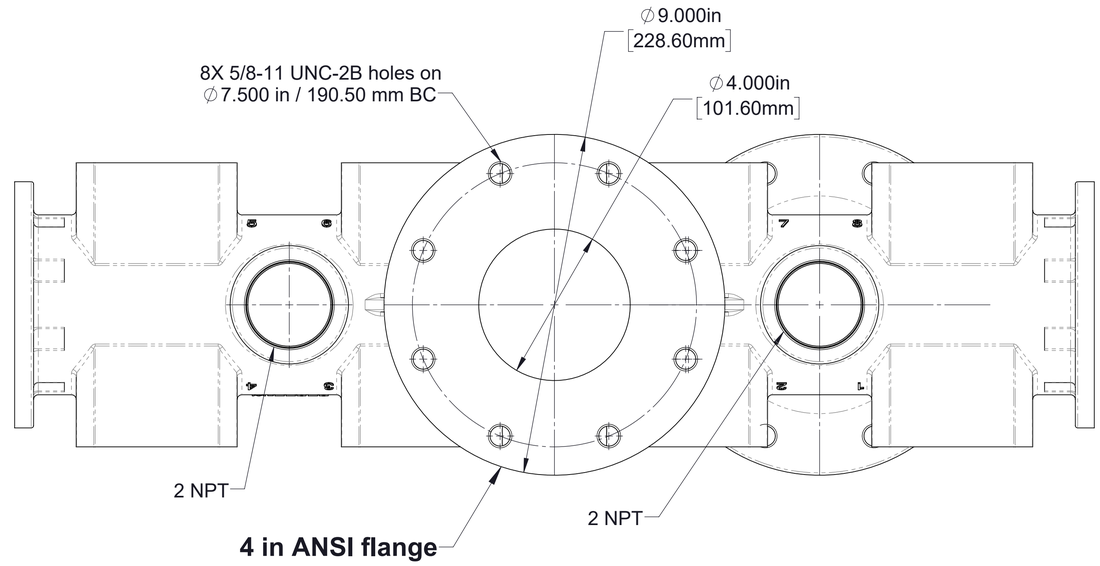

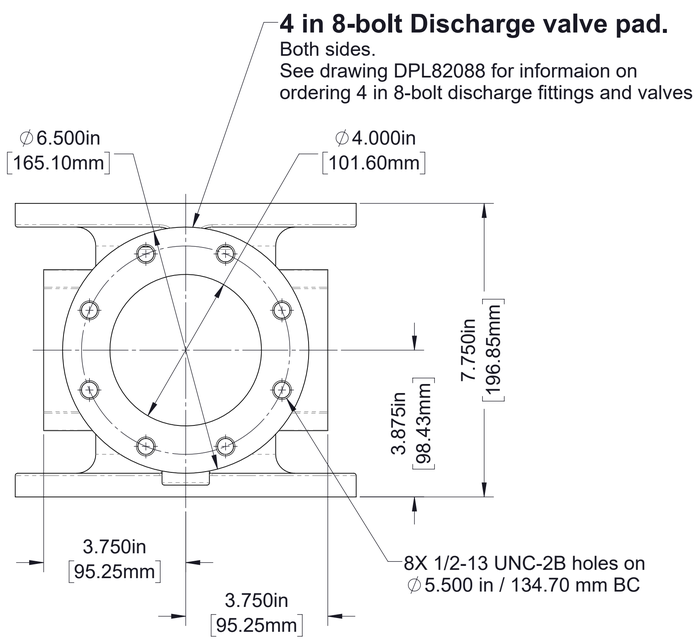

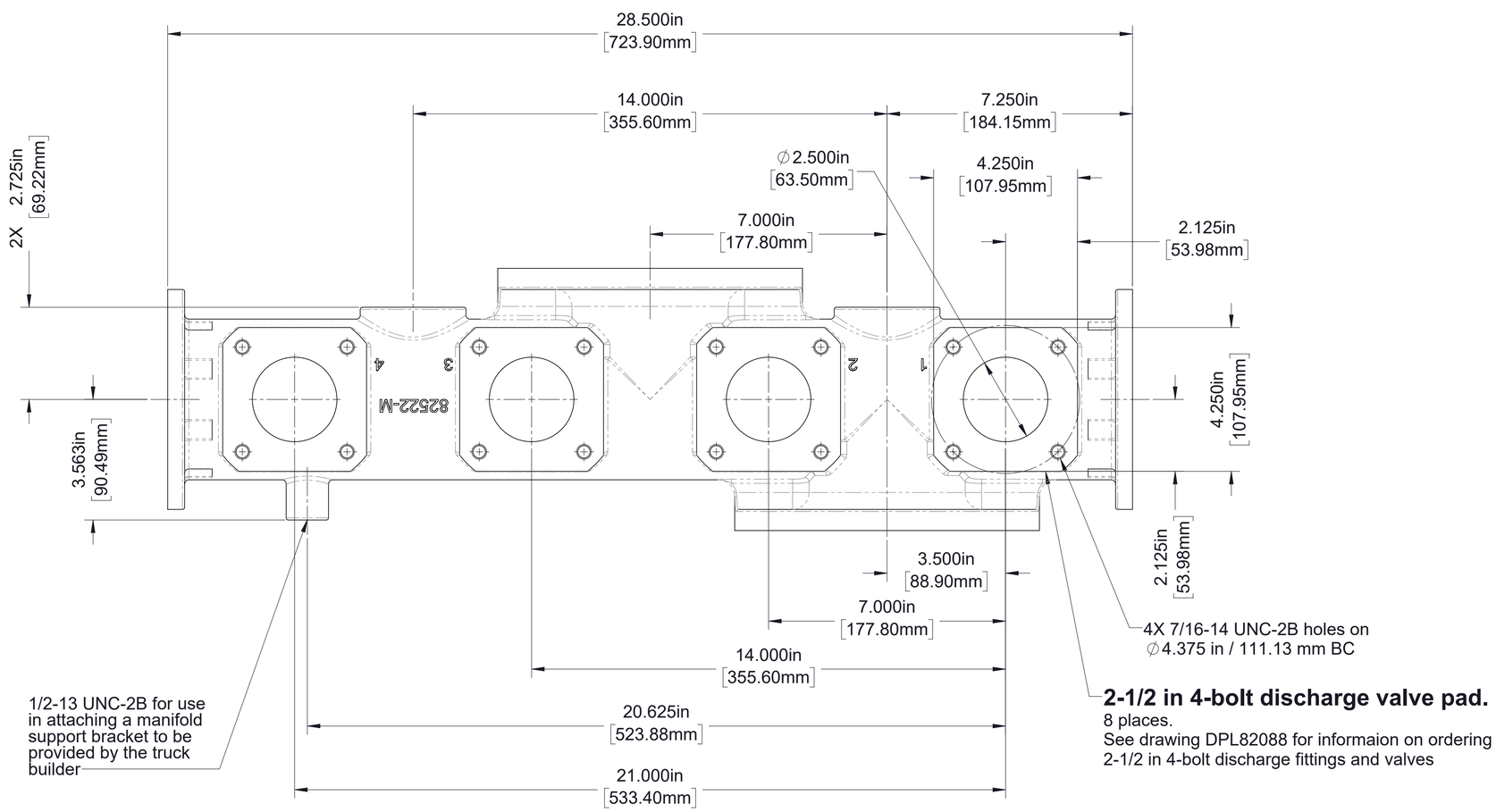

Optional Discharge Manifold w/ 4 in End Flanges

See pages 29, 30, 32, and 33 for mounting details and pad designations

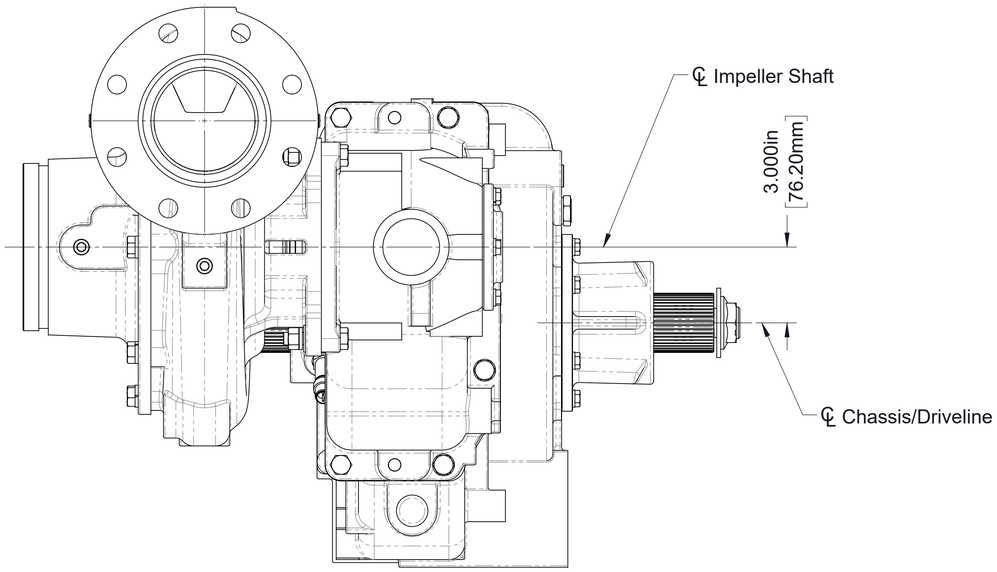

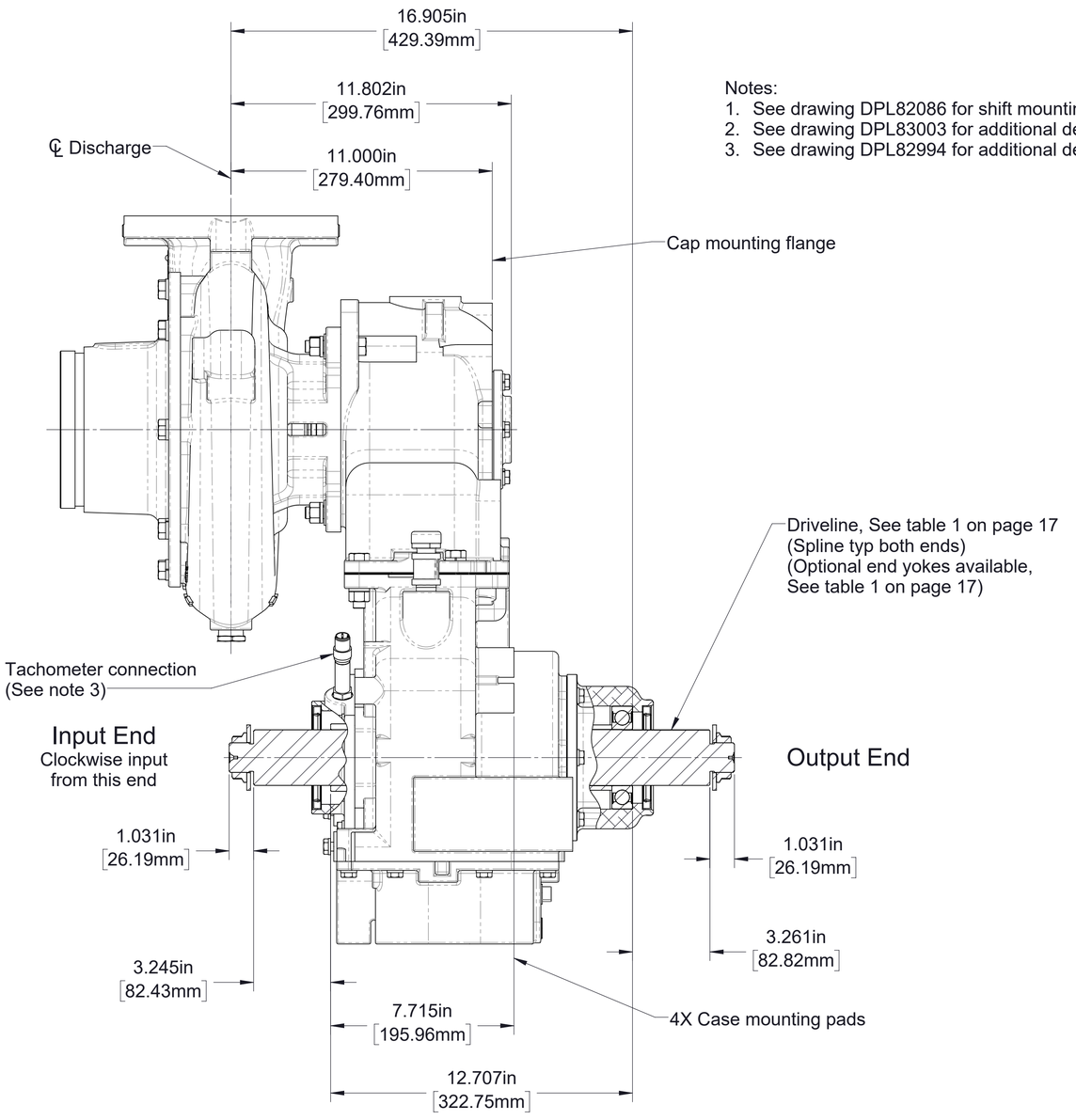

Notes:
1. See drawing DPL82086 for shift mounting pad details
2. See drawing DPL83003 for additional details on CXC20 pumps with Eclipse ES CAFS.
3. See drawing DPL82994 for additional details of C20 series transmission

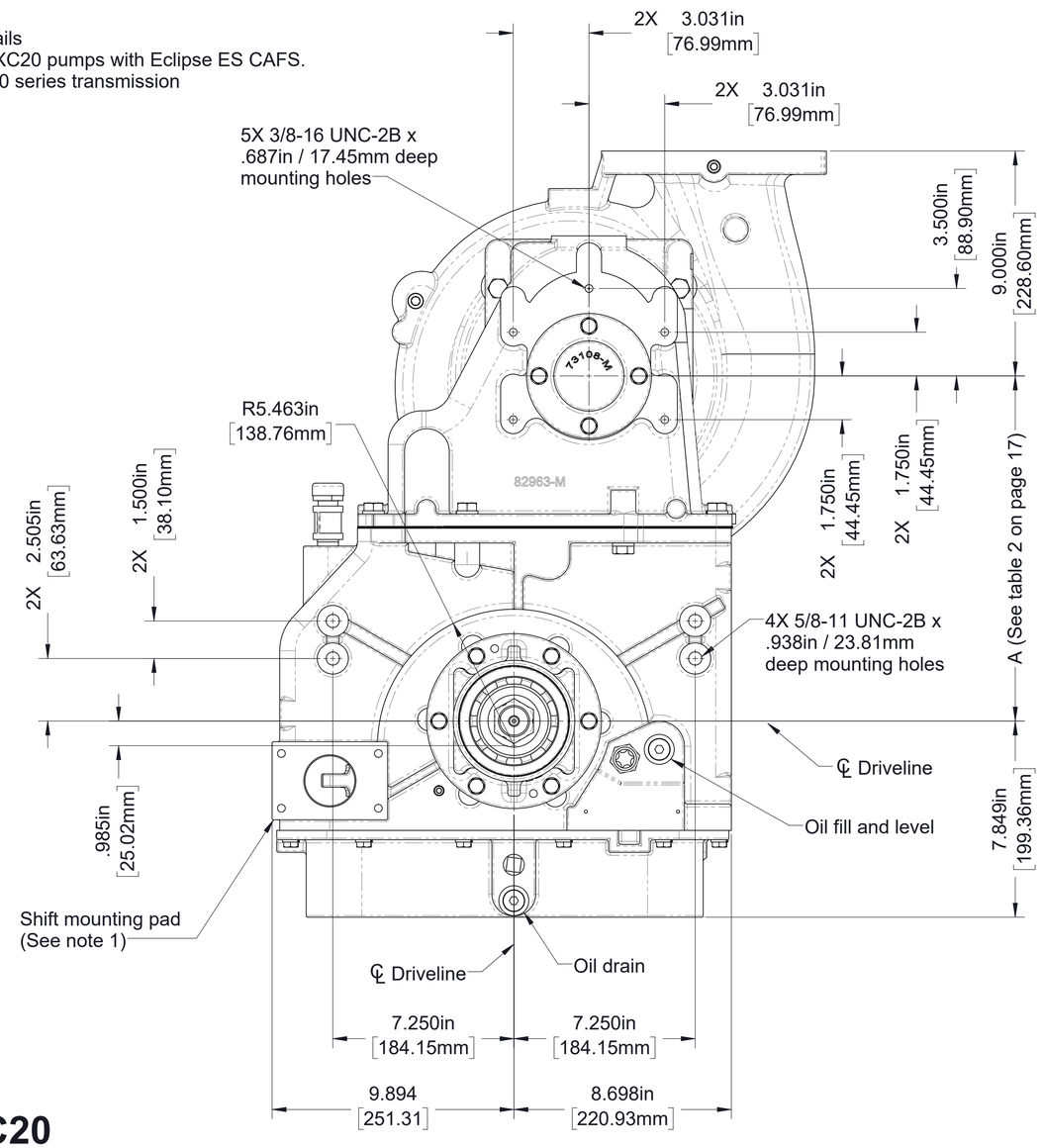

Model CX with C20

Input and Output Shaft
Pump mounted on front (Input shaft side) of transmission
Clockwise input, model CXVC20C, 2.27 ratio, blank discharge shown

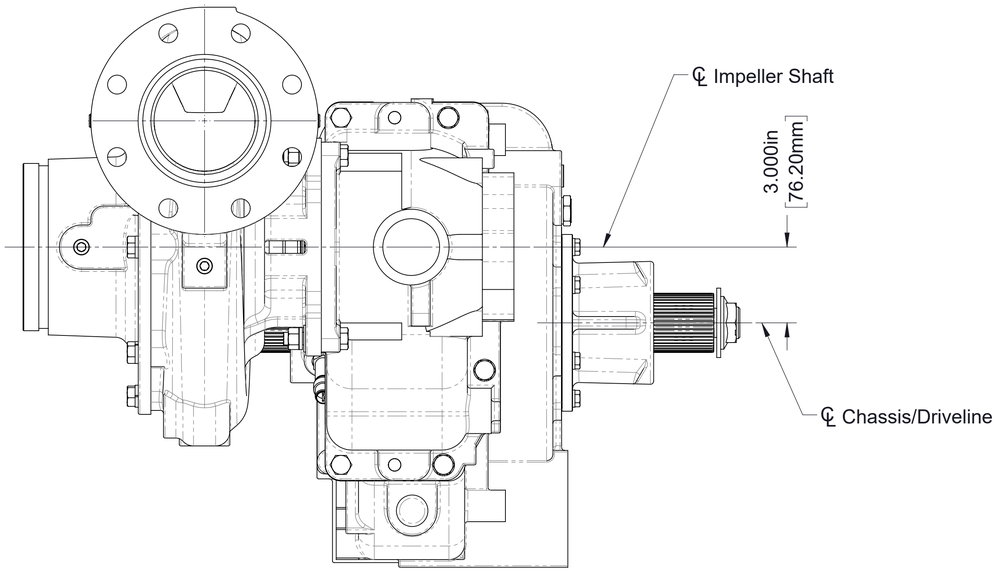

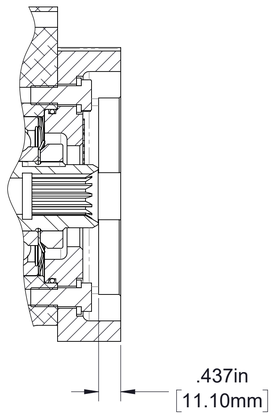

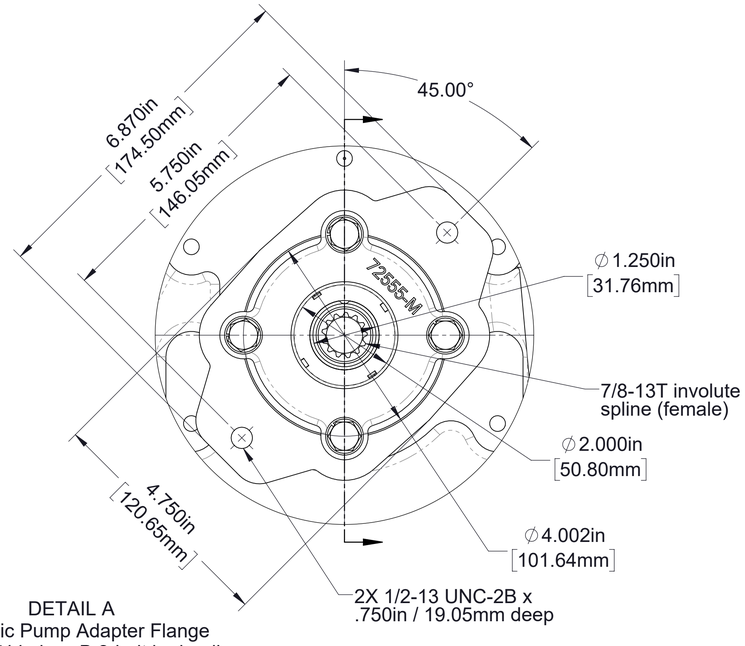

DETAIL A
Hydraulic Pump Adapter Flange
Used for SAE J744 class B 2-bolt hydraulic pump
with male 7/8-13T 16/32 pitch involute spline

Notes:
1. See drawing DPL82086 for shift mounting pad details
2. See drawing DPL82994 for additional details of C20 series transmission

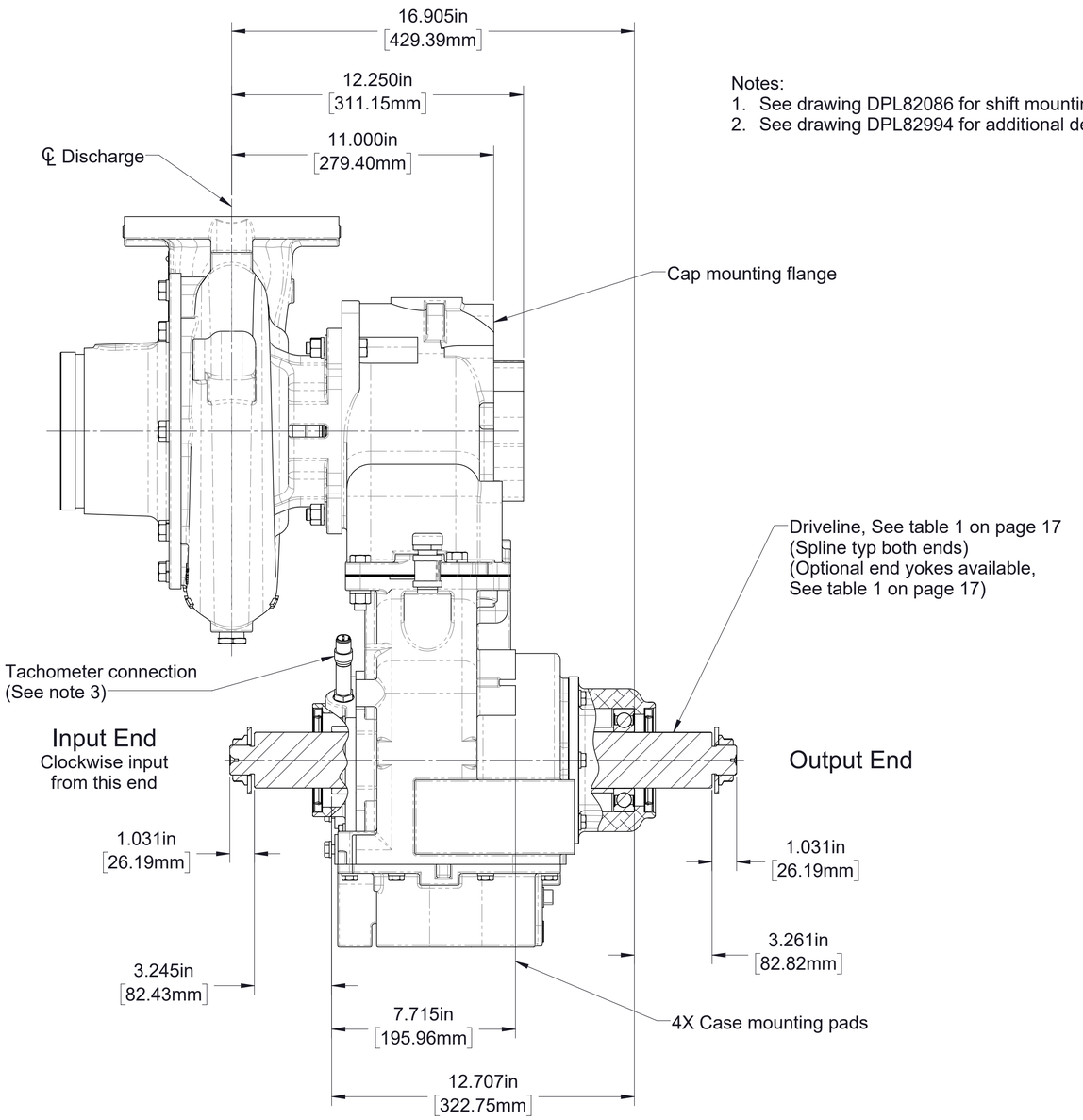

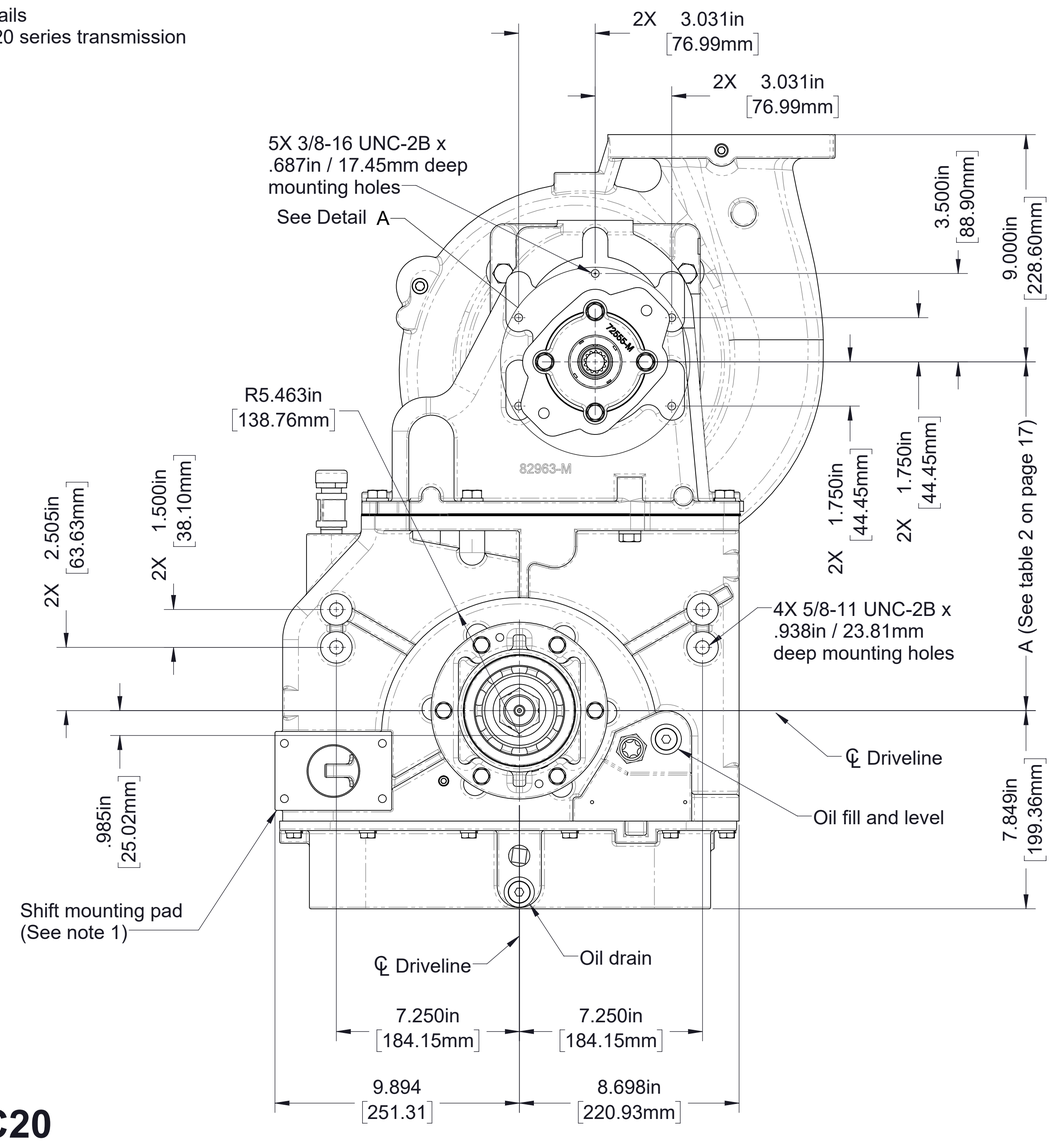

Model CX with C20

Input and Output Shaft
Pump mounted on front (Input shaft side) of transmission
With optional hydraulic motor mount provision
Clockwise input, model CXVC20C, 2.27 ratio, blank discharge shown

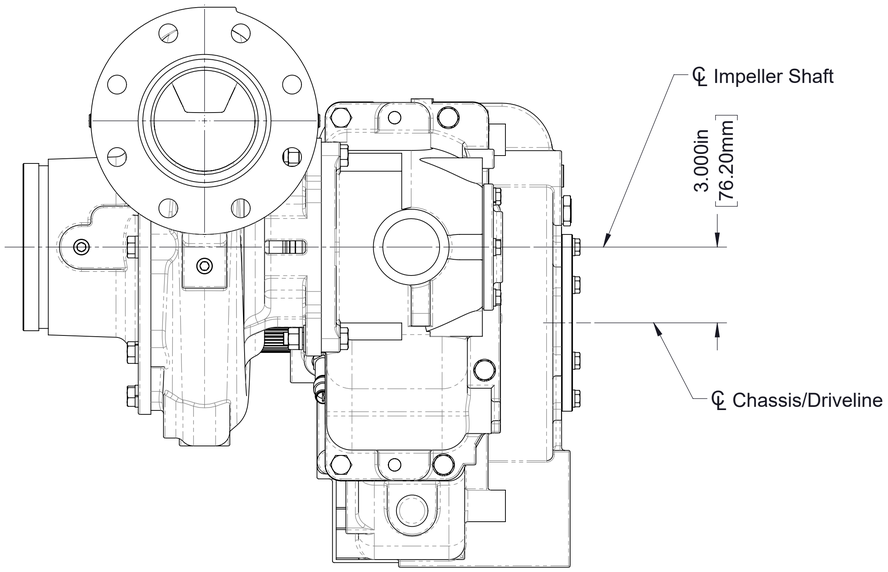

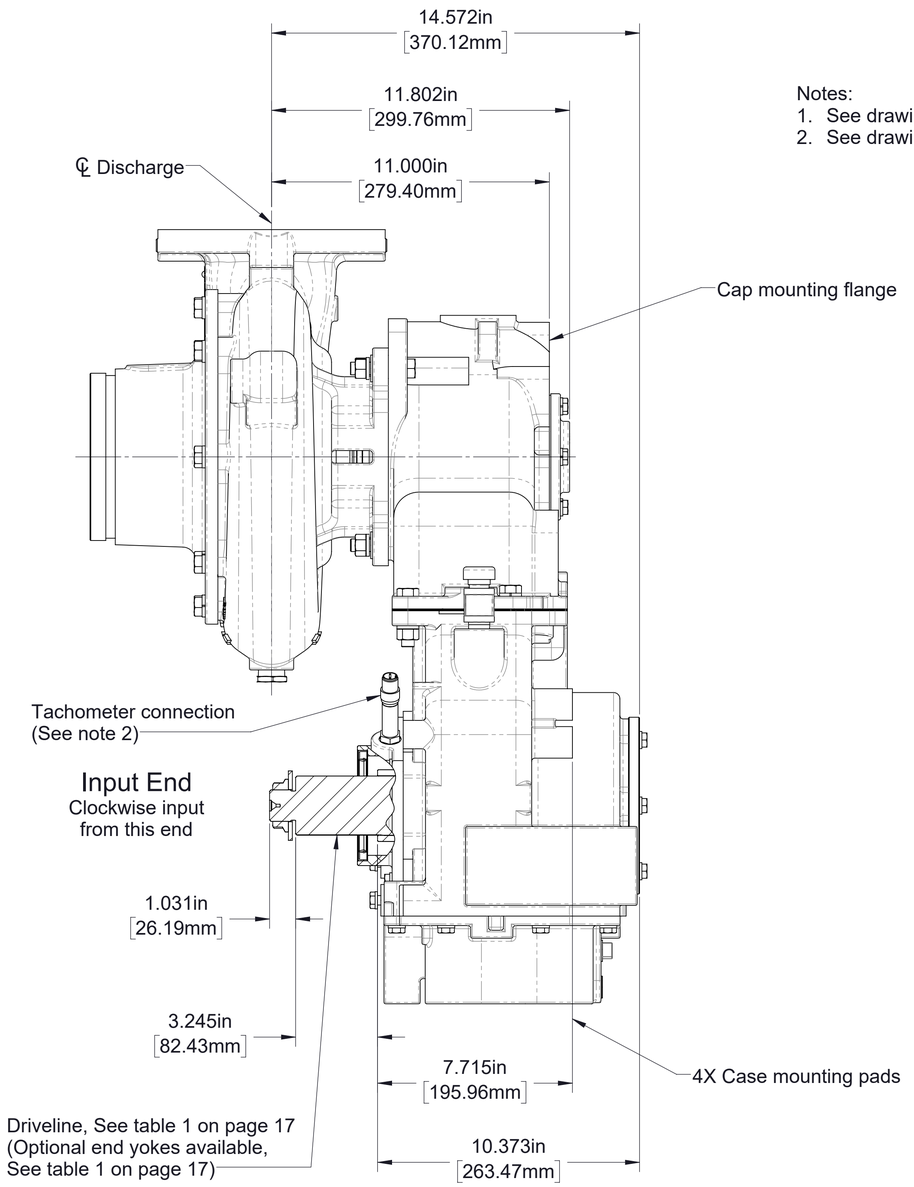

Notes:
1. See drawing DPL83003 for additional details on CXC20 pumps with Eclipse ES CAFS.
2. See drawing DPL82994 for additional details of C20 series transmission

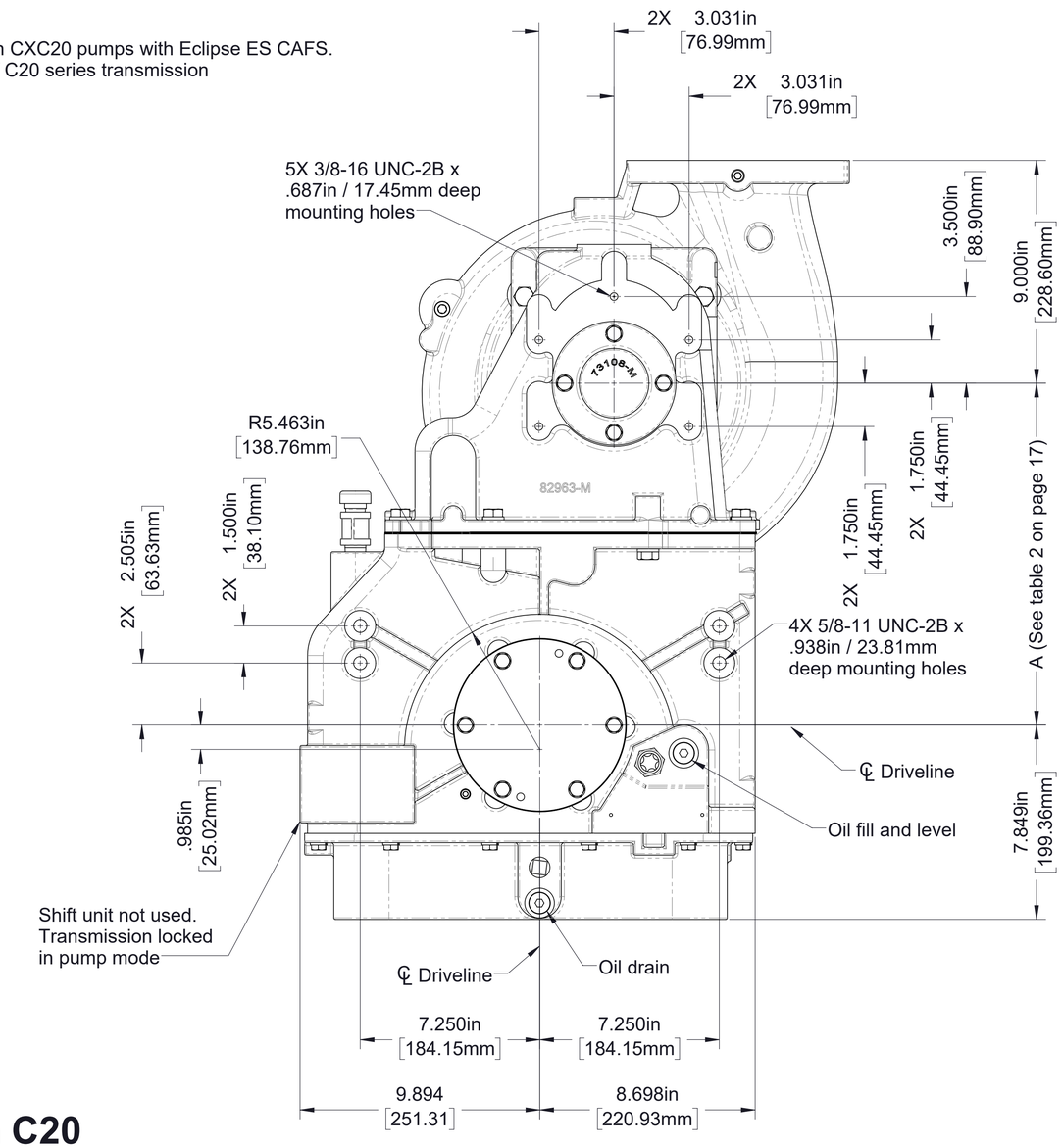

Model CX with C20

Input Shaft Only

Pump mounted on front (Input shaft side) of transmission

Clockwise input, model CXVC20C, 2.27 ratio, blank discharge shown

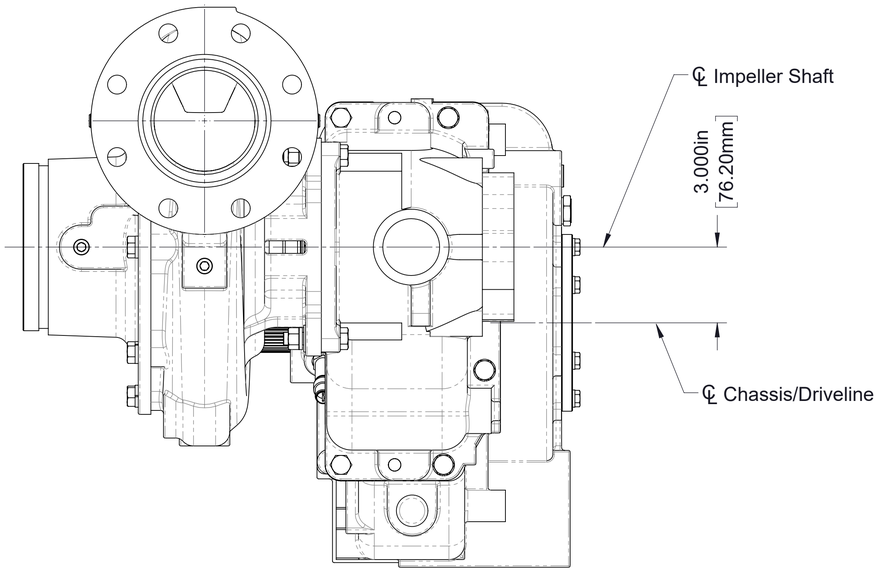

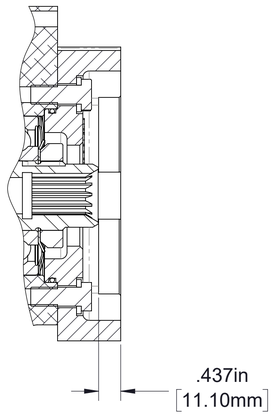

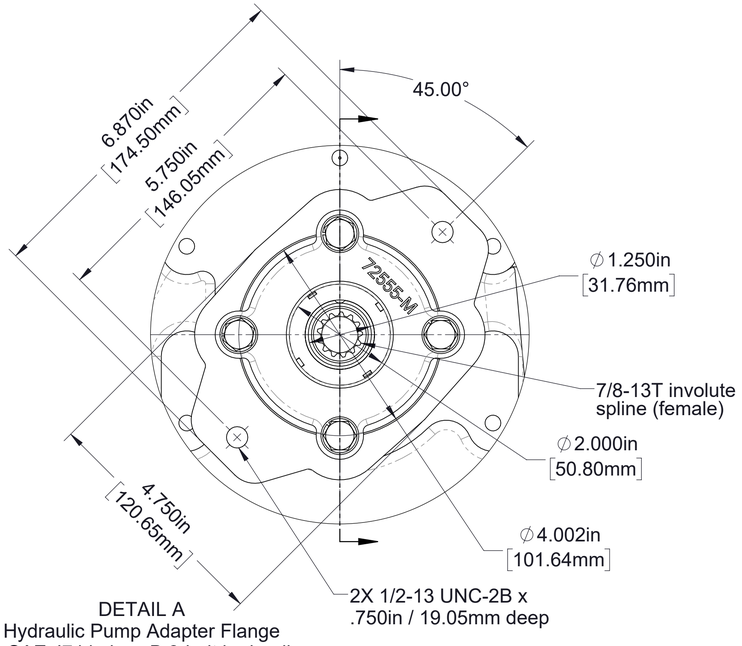

DETAIL A
Hydraulic Pump Adapter Flange
Used for SAE J744 class B 2-bolt hydraulic pump
with male 7/8-13T 16/32 pitch involute spline

Note:
1. See drawing DPL82994 for additional details of C20 series transmission

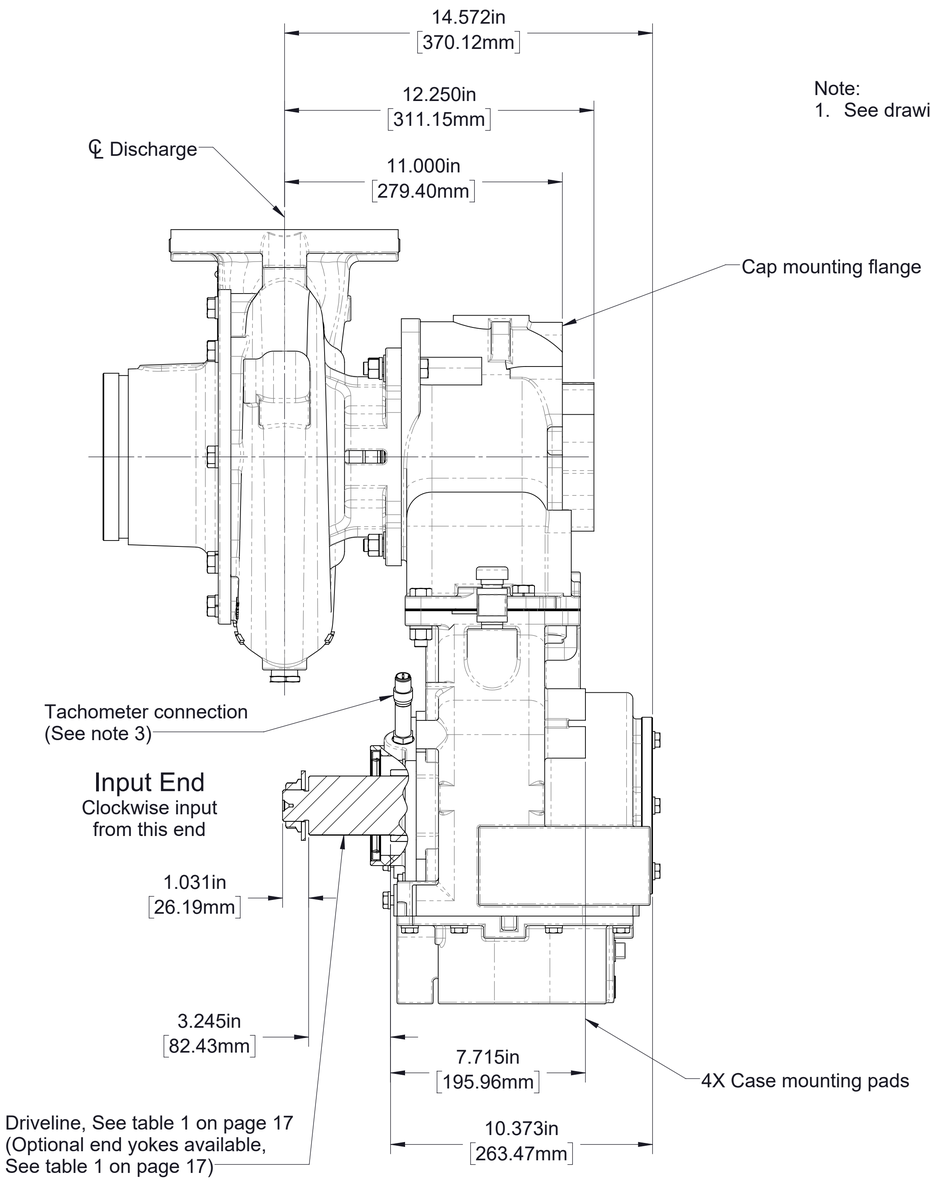

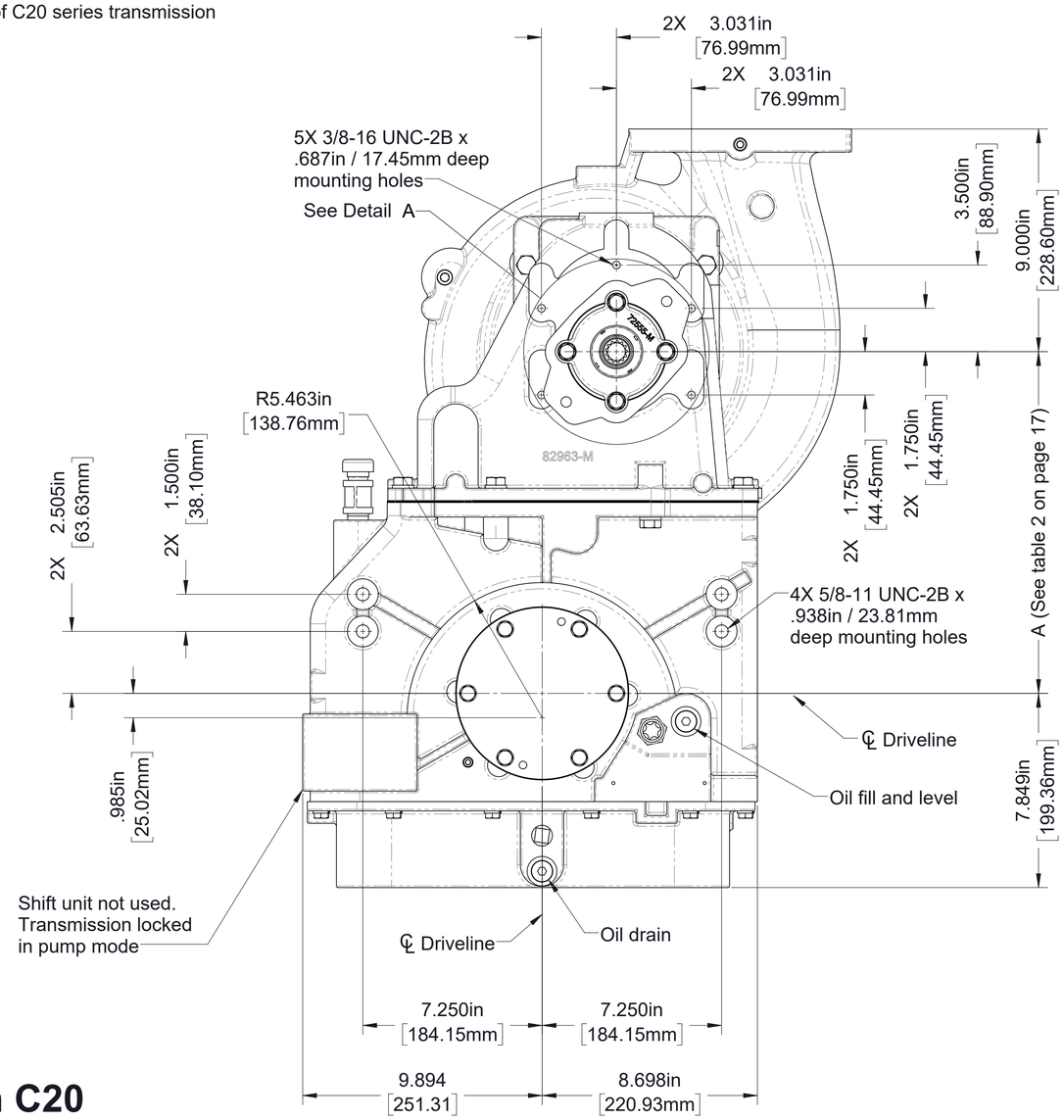

Model CX with C20

Input Shaft Only
Pump mounted on front (Input shaft side) of transmission
With optional hydraulic motor mount provision
Clockwise input, model CXVC20C, 2.27 ratio, blank discharge shown

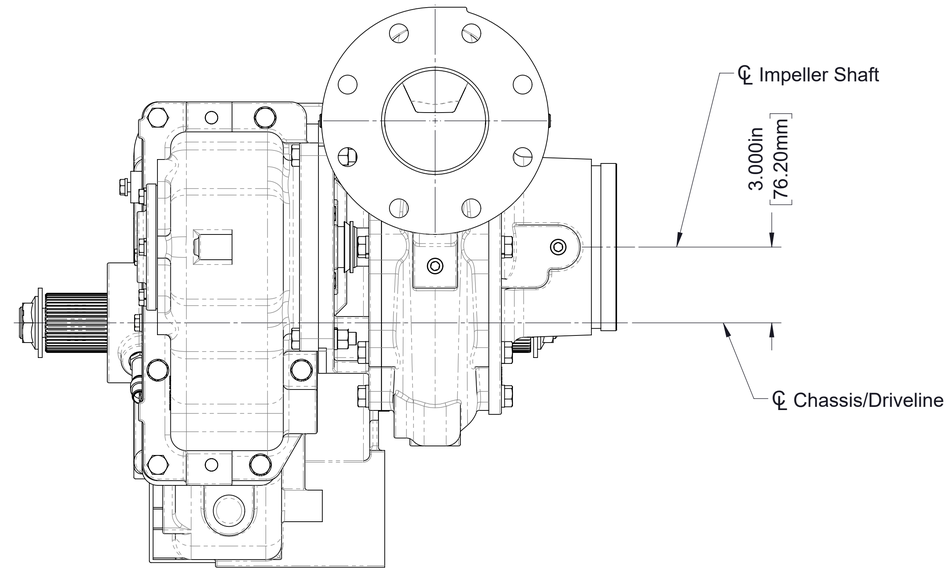

Notes:
1. See drawing DPL82086 for shift mounting pad details
2. See drawing DPL82994 for additional details of C20 series transmission

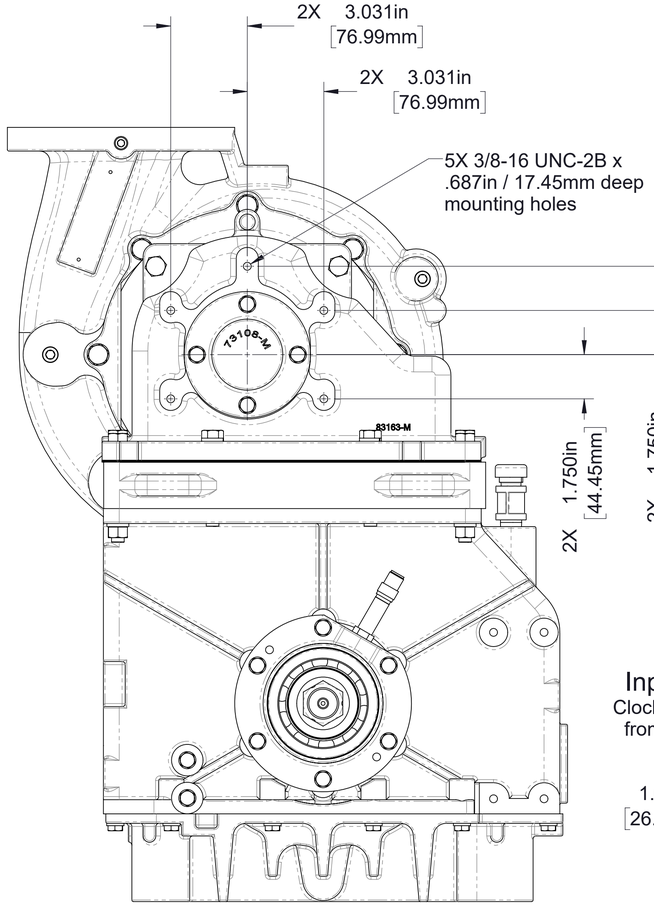

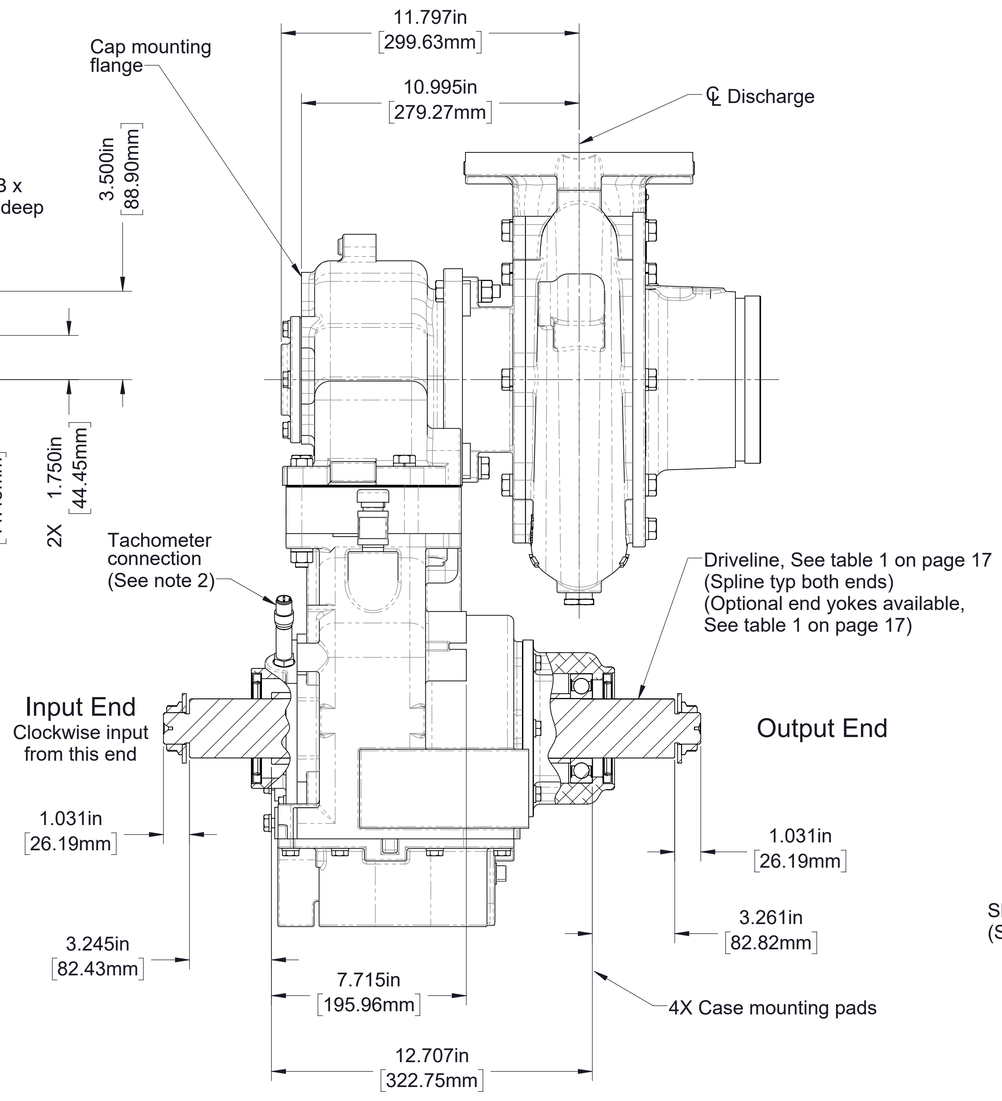

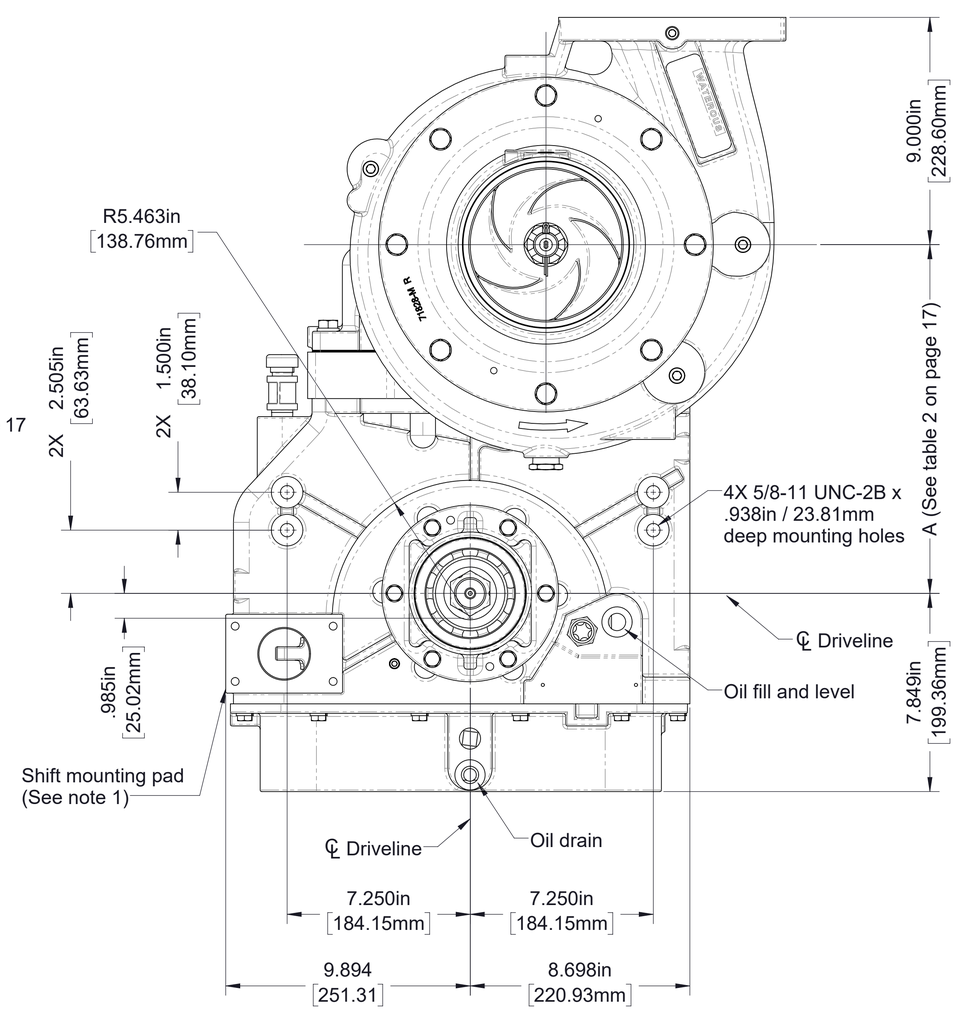

Model CX with C20

Input and Output Shaft
Pump mounted on rear (Output shaft side) of transmission
Clockwise input, model CXVC20C, 2.27 ratio, blank discharge shown

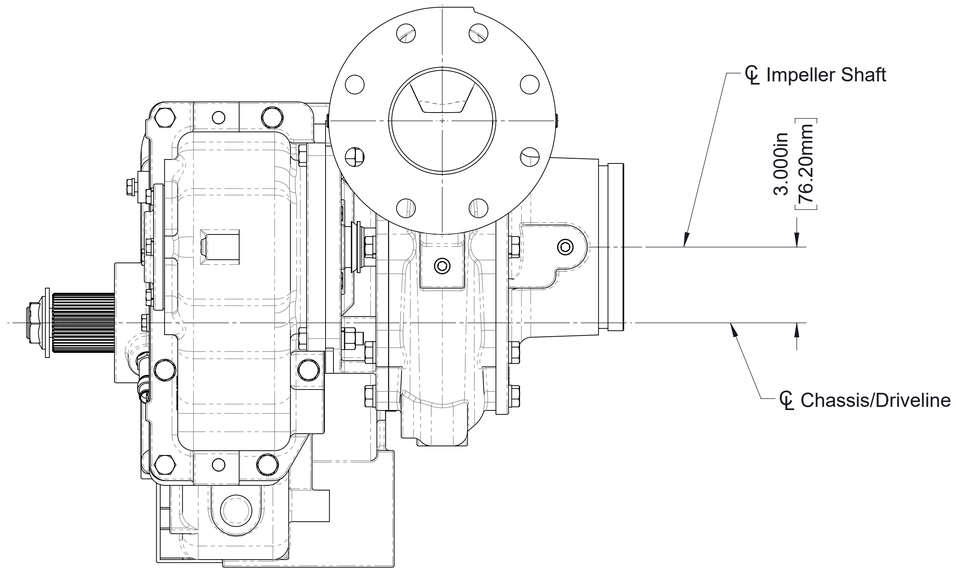

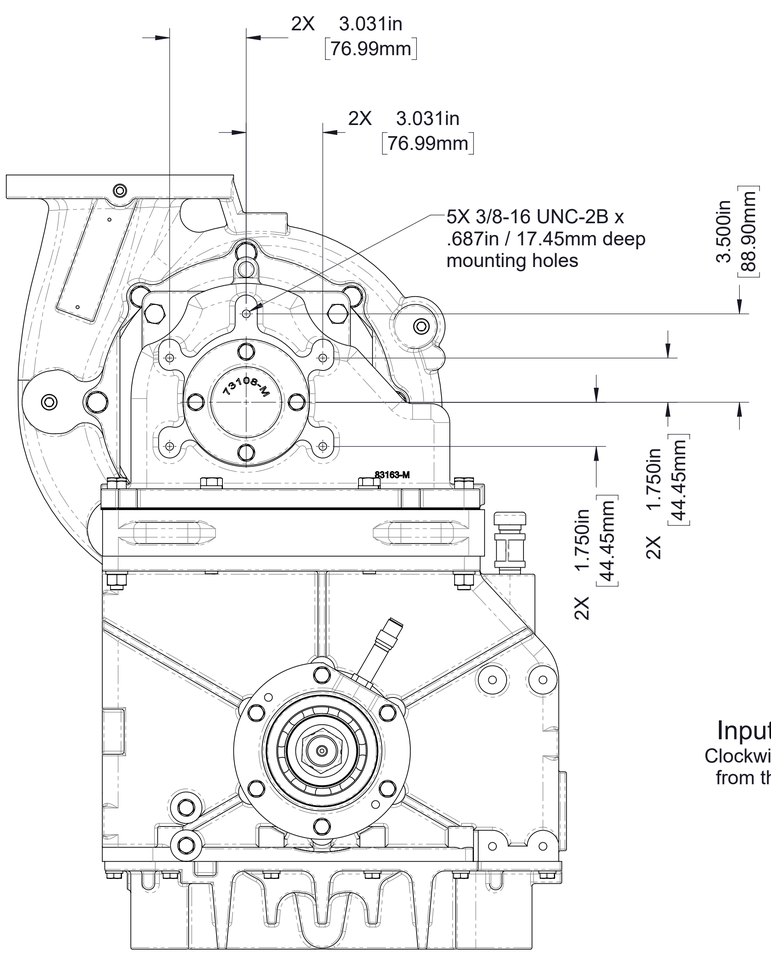

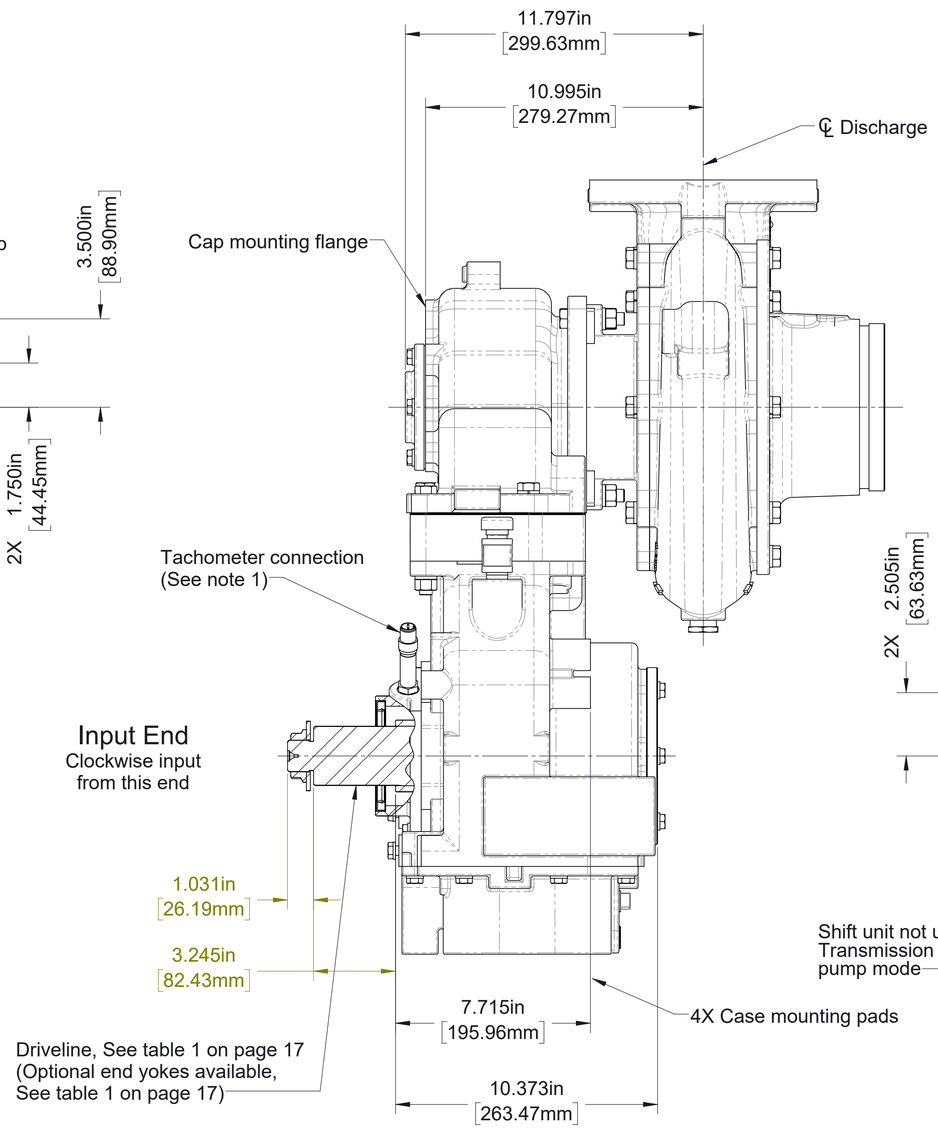

Note:
1. See drawing DPL82994 for additional details of C20 series transmission

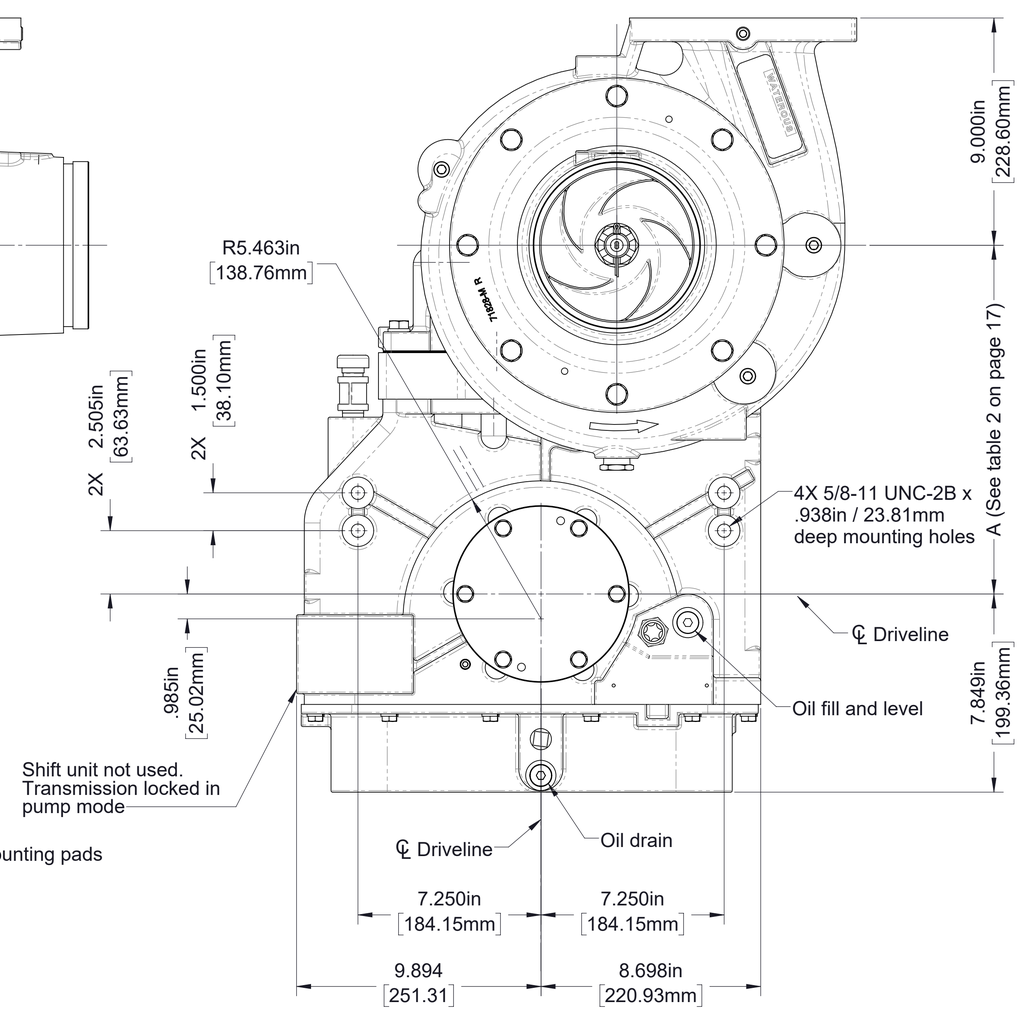

Model CX with C20

Input Shaft Only

Pump mounted on rear (Output shaft side) of transmission

Clockwise input, model CXVC20C, 2.27 ratio, blank discharge shown

Table 1 - Available Driveline/Models						
Driveline			**Optional End Yokes Available from Waterous**			**Companion Flange**
Type	Size	Spline	Yoke		Cross and Bearing Kit	
			Spicer Series	Part No.		
Extra Heavy Duty	2.35 Inch	2.35-46T Involute	1480/1610	--	--	V 3719
			1650/1710	--	--	V 3619
			1710 BP	V 2837	V 2839	--
			1810 BP	V 2838	V 2840	--
			1710 HR	V 4101	--	--
			1810 HR	V 4102	--	--
			SPL140	V 3388	V 3389	--

Table 2 - Available Ratios				
Dimension A				
Drive to Driven Ratio	**All dimensions shown as inch/millemeter**			
	C20C	**C20D**	**C20E**	**C20F**
1.27	14.312/363.52	14.825/376.56	16.861/428.27	18.892/479.86
1.41	13.899/353.03	14.931/379.25	16.971/431.06	19.002/482.65
1.48	13.878/352.50	14.907/378.64	16.951/430.56	18.981/482.12
1.58	13.756/349.40	14.788/375.62	16.830/427.48	18.861/479.07
1.69	13.839/351.51	14.876/377.85	16.923/429.84	18.961/481.61
1.79	14.045/356.74	15.072/382.83	17.127/435.03	19.168/486.87
1.88	13.690/347.73	14.717/373.81	16.773/426.03	18.809/477.75
1.97	13.870/352.30	14.912/378.76	16.970/431.04	19.012/482.90
2.03	13.984/355.19	15.028/381.71	17.086/433.98	19.132/485.95
2.27	13.811/350.80	14.856/377.34	16.920/429.77	18.971/481.86
2.46	14.042/356.67	15.087/383.21	17.154/435.71	19.205/487.81
2.68	13.746/349.15	14.793/375.74	16.865/428.37	18.923/480.64

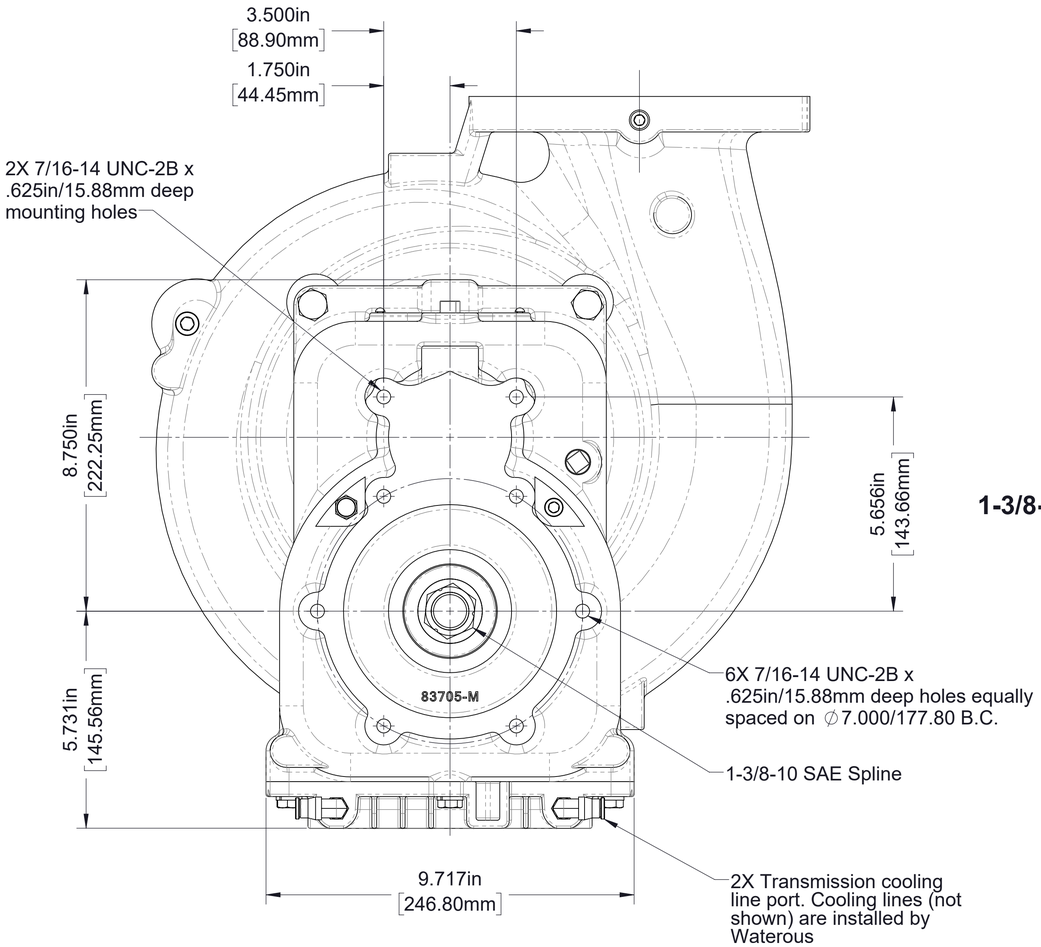

1-3/8-10 SAE Splined Input

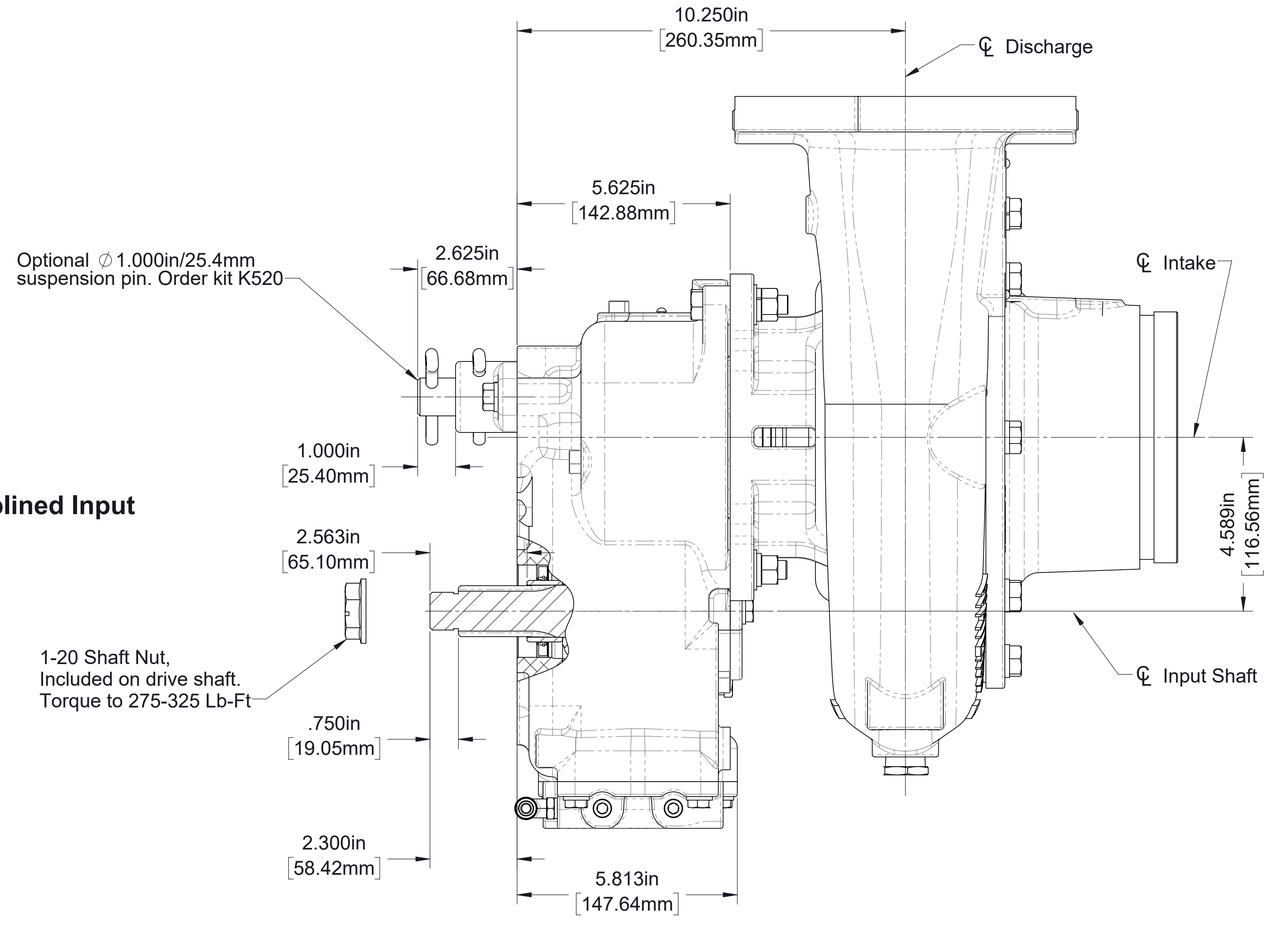

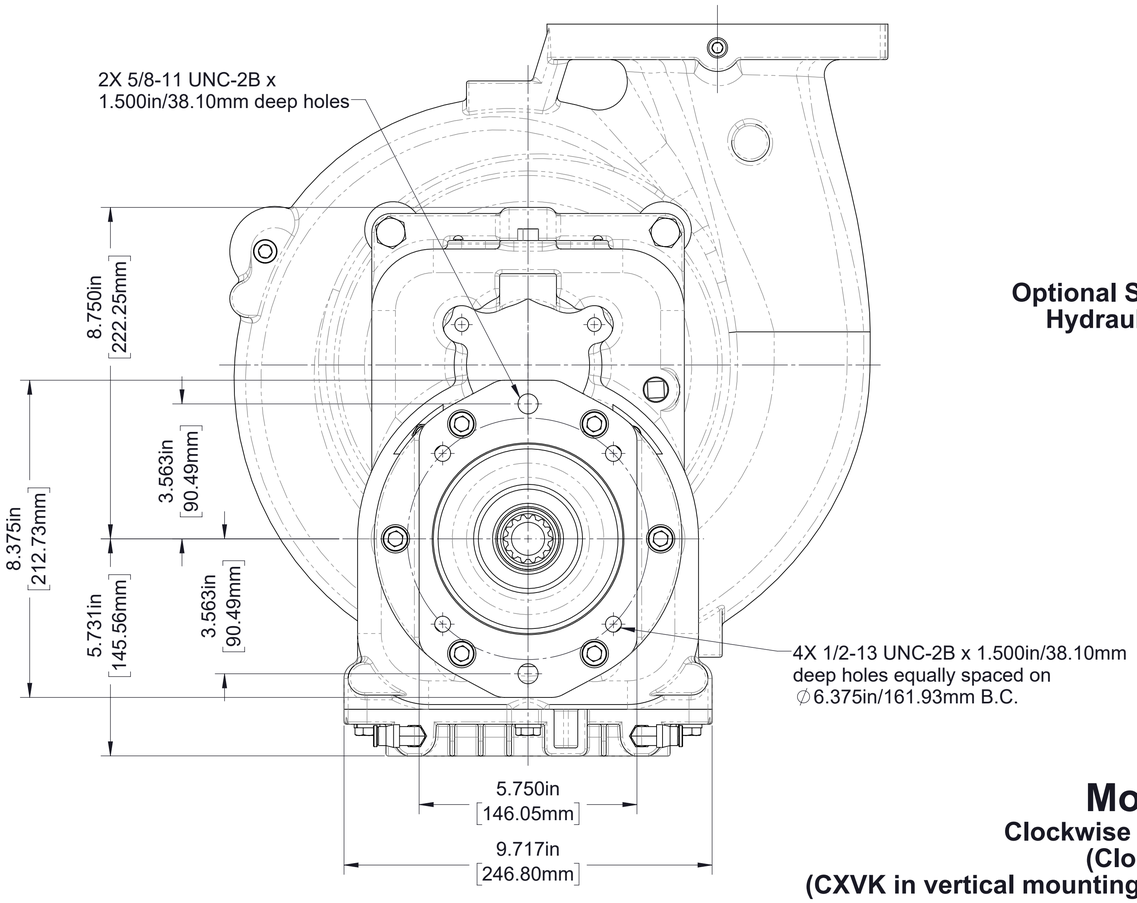

Optional SAE Class "C" 2 or 4 Bolt Hydraulic Pump Flange Input

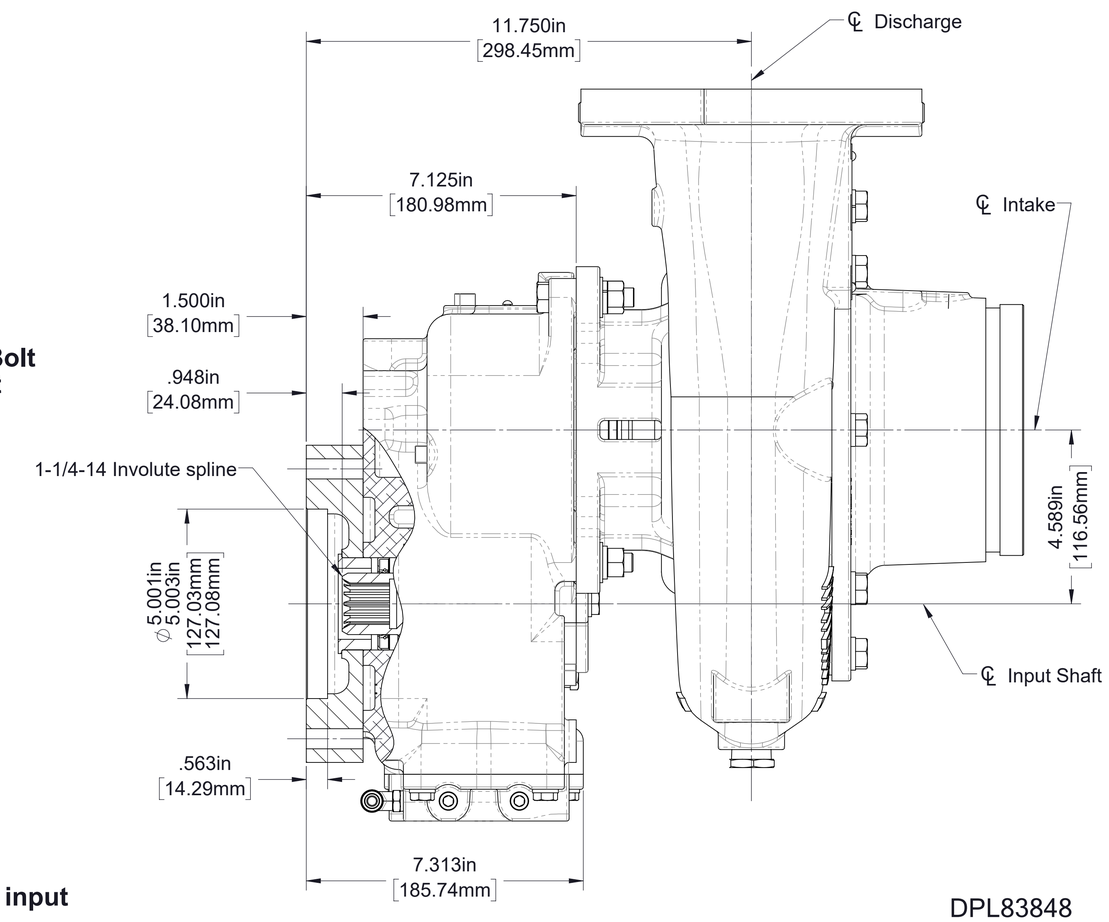

Model CX with K

Clockwise or Counterclockwise input
(Clockwise input shown)
(CXVK in vertical mounting position shown, See page 26 for mounting positions)

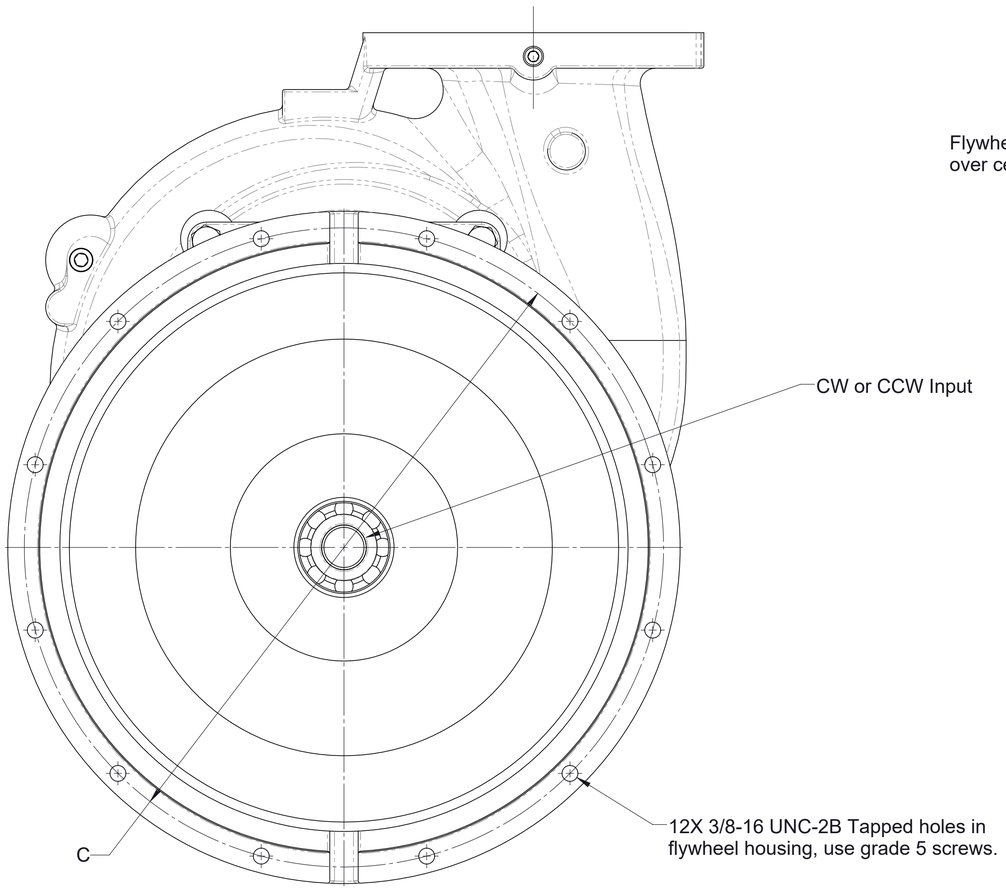

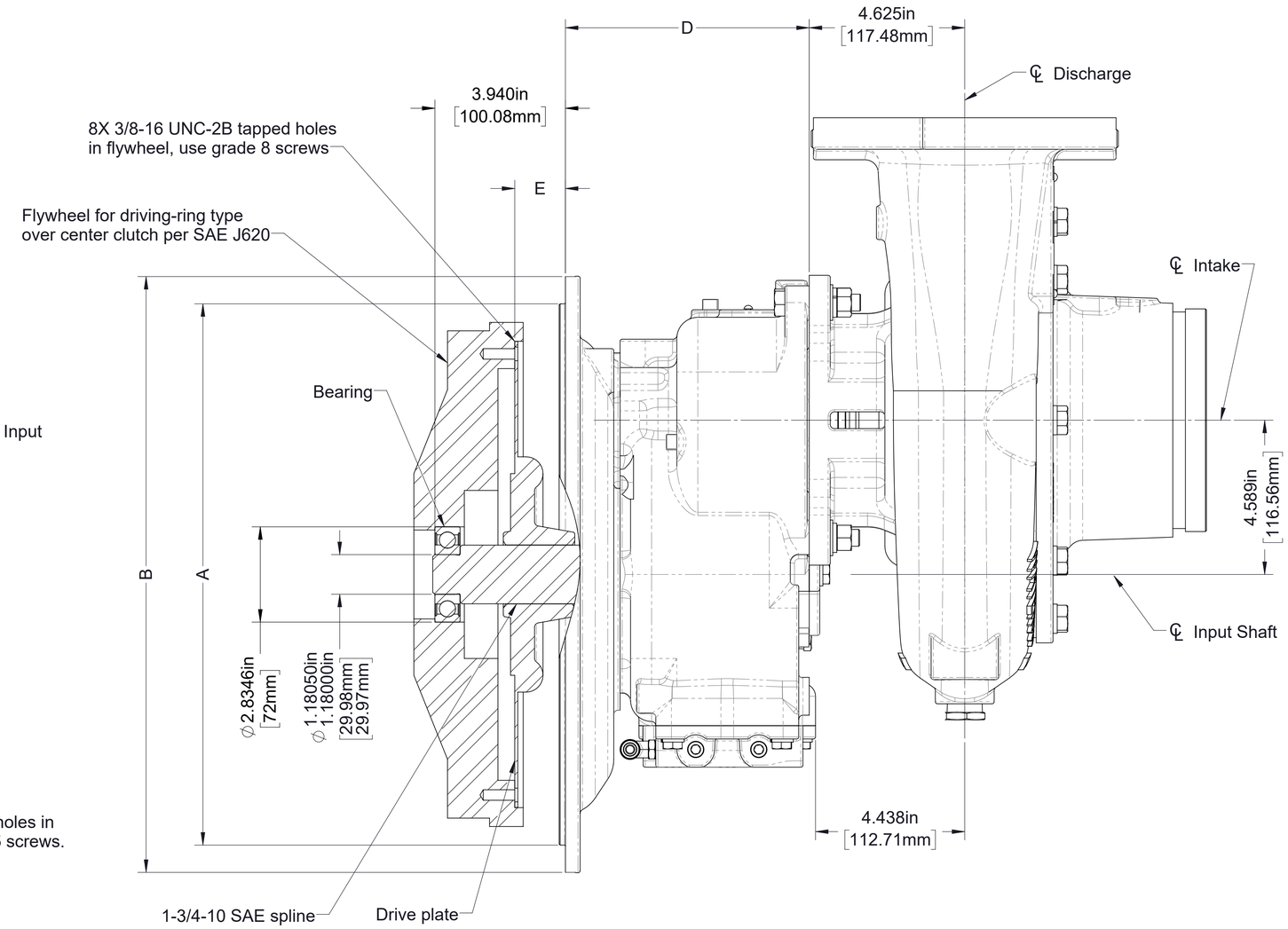

SAE Bellhousing - J617				D	SAE Flywheel - J620		Drive Plate	
Size	A	B	C		Clutch No.	E	Part No.	Torque Rating
2	17.625in 447.68mm	19.250in 488.95mm	18.375in 466.73mm	8.250in 209.55mm	10	2.12in 53.85mm	V 2462	850 ft-lb 1153 Joules
3	16.125in 409.58mm	17.750in 450.85mm	16.875in 428.63mm	7.250in 184.15mm				
4	14.250in 361.95mm	15.875in 403.23mm	15.000in 381.00mm					
2	17.625in 447.68mm	19.250in 488.95mm	18.375in 466.73mm	8.250in 209.55mm	11-1/2	1.56in 39.62mm	V 2463	
3	16.125in 409.58mm	17.750in 450.85mm	16.875in 428.63mm	7.250in 184.15mm				

Model CX with T

Clockwise or Counterclockwise input
(Clockwise input shown)
(CXVT in vertical mounting position shown, See page 26 for mounting positions)

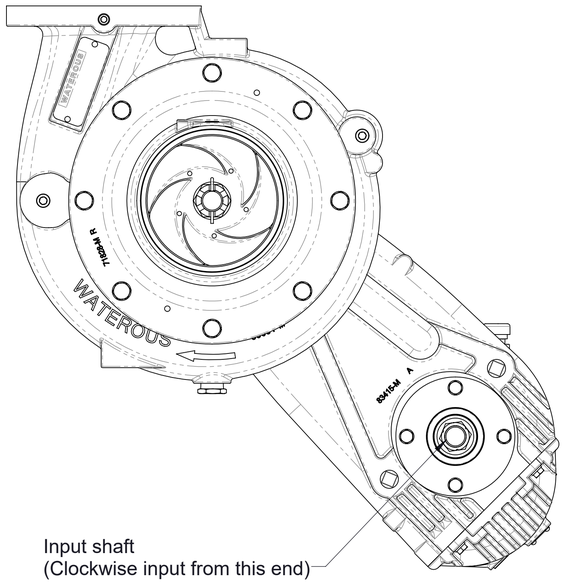

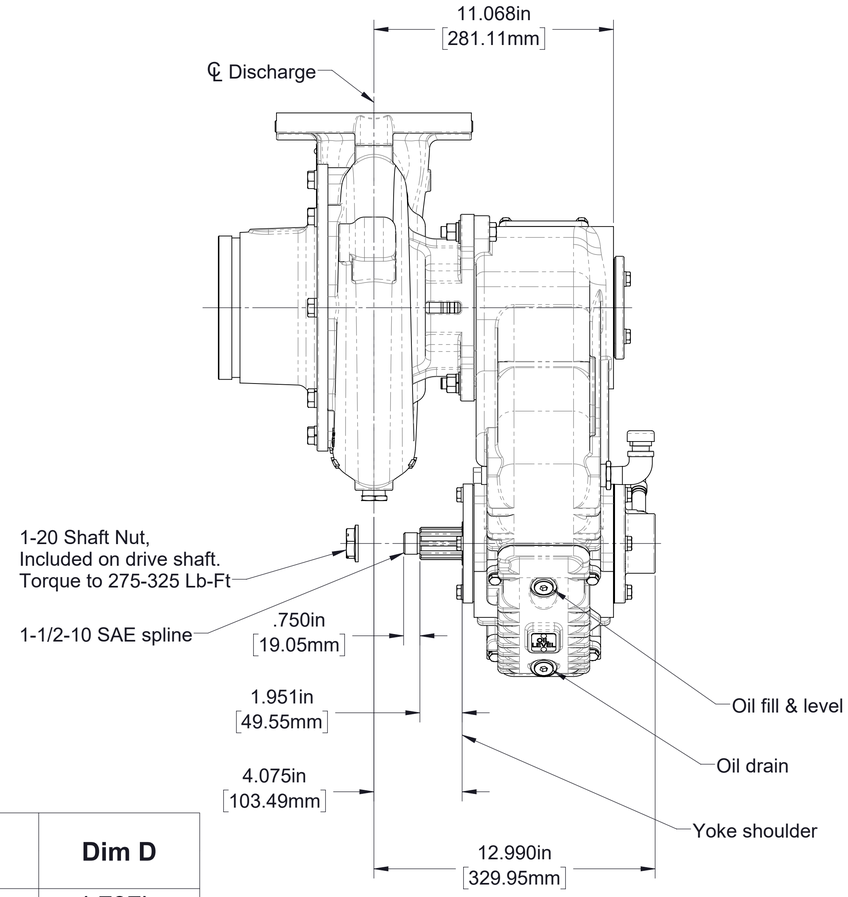

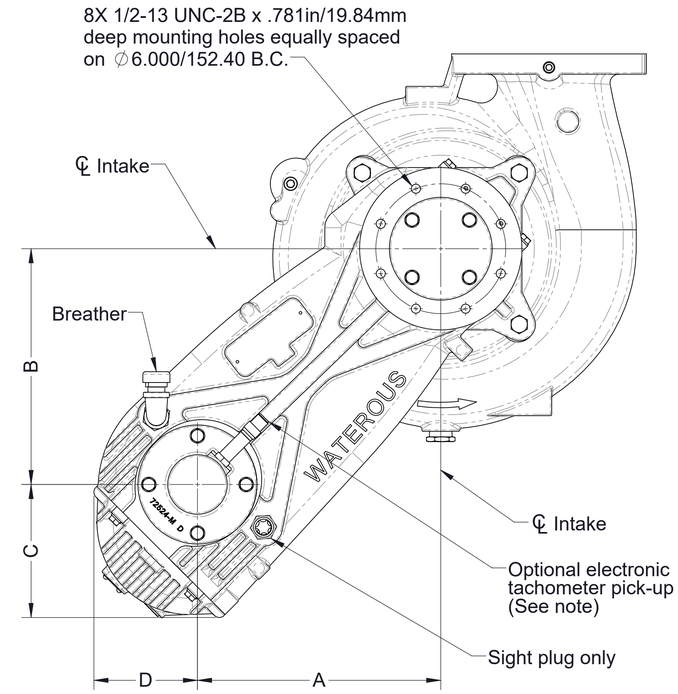

Vertical Mounting
(Transmission input shaft to the right of the pump intake)

Drive Line		Ratio	Dim A	Dim B	Dim C	Dim D
Size	Spline					
1-1/2 in	1-1/2-10 SAE	1.70	11.288in 286.71mm	10.943in 277.94mm	6.111in 155.22mm	4.737in 120.32mm
		1.90	11.269in 286.24mm	10.924in 277.47mm	6.130in 155.70mm	4.755in 120.79mm
		2.10	11.239in 285.46mm	10.894in 276.70mm	6.160in 156.46mm	4.786in 121.56mm

Model CX with PA

Clockwise input
CXVPA shown

Note: 1. See drawing DPL82080 for additional details of PA transmission

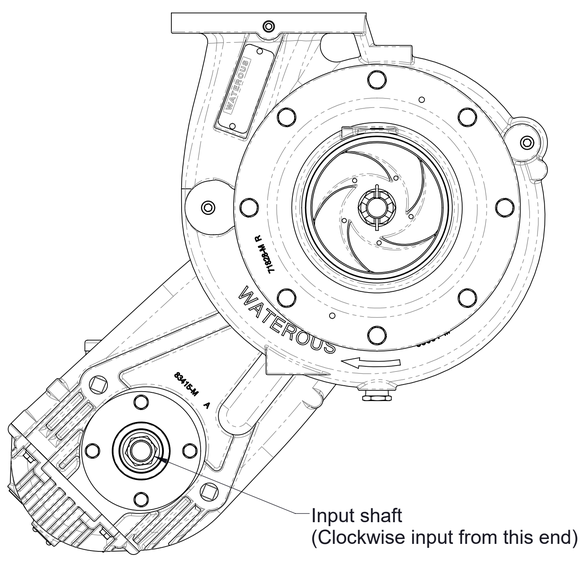

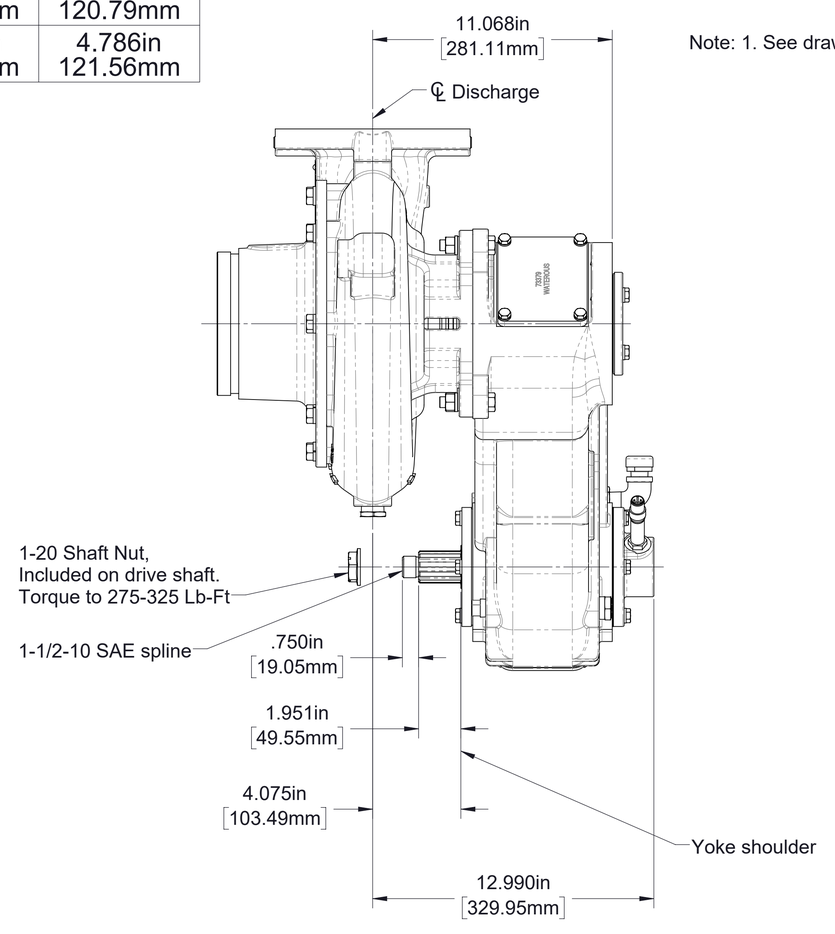

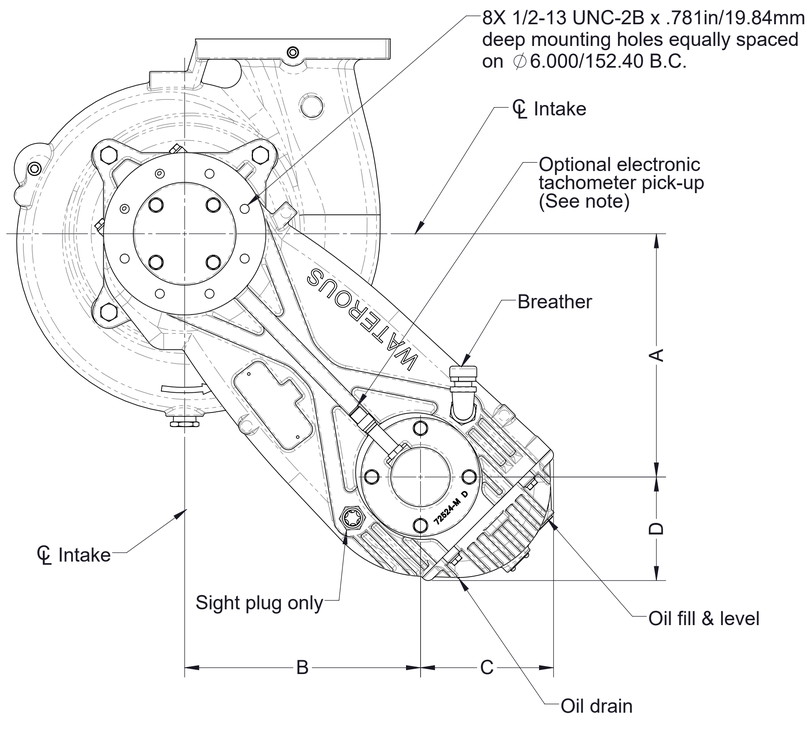

Left Mounting
(Transmission input shaft to the left of the pump intake)
(CXV and CXS pumps only)

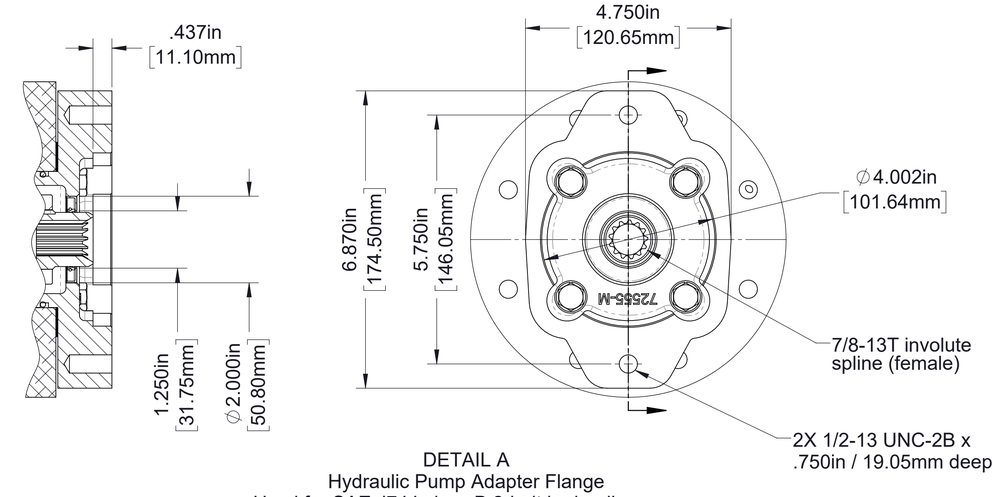

DETAIL A
Hydraulic Pump Adapter Flange
Used for SAE J744 class B 2-bolt hydraulic pump
with male 7/8-13T 16/32 pitch involute spline

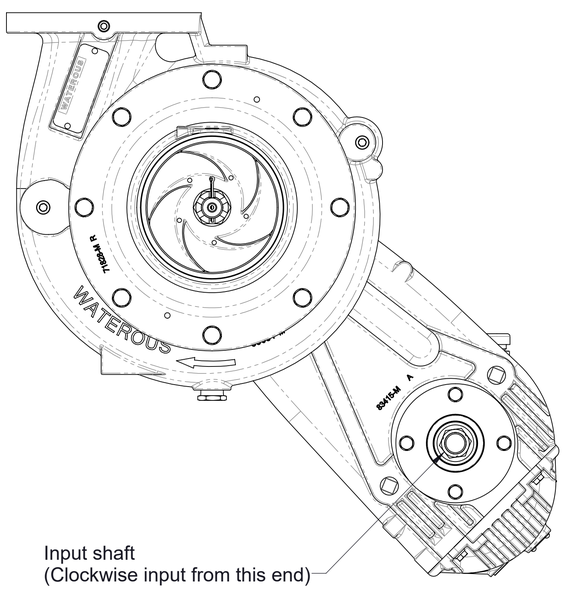

Vertical Mounting
(Transmission input shaft to the right of the pump intake)

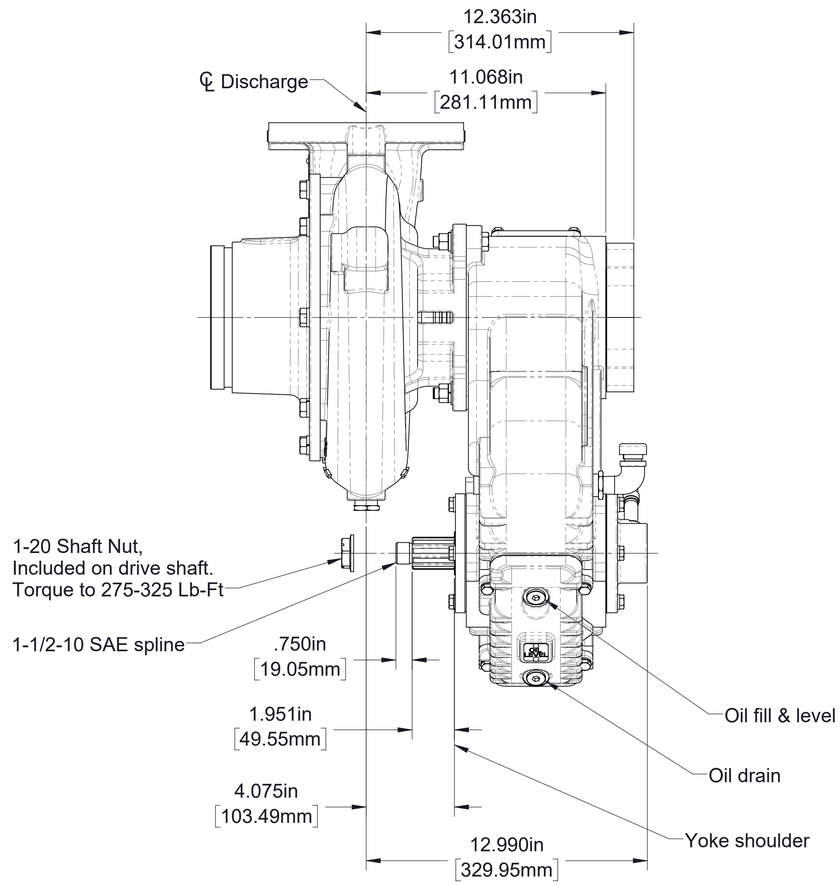

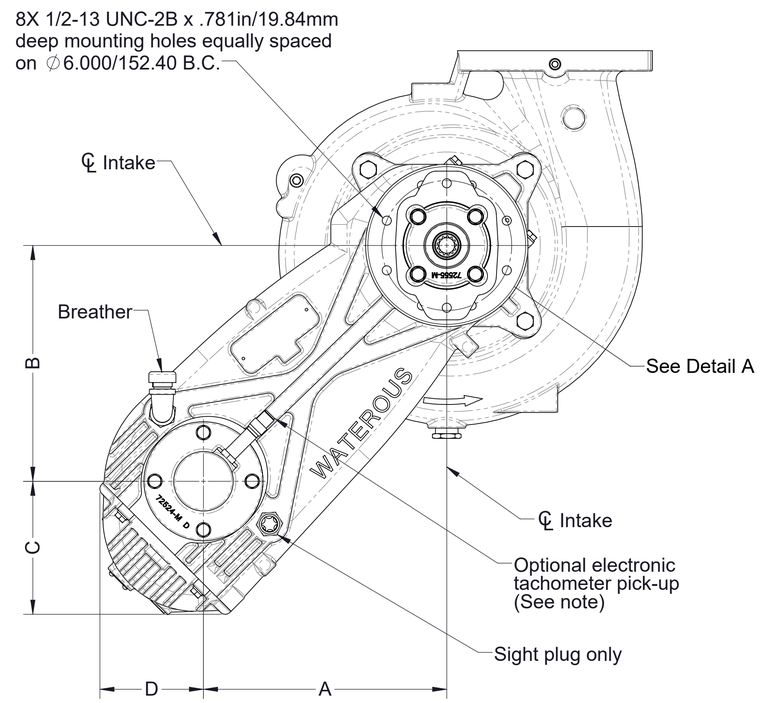

Drive Line		Ratio	Dim A	Dim B	Dim C	Dim D
Size	Spline					
1-1/2 in	1-1/2-10 SAE	1.70	11.288in 286.71mm	10.943in 277.94mm	6.111in 155.22mm	4.737in 120.32mm
		1.90	11.269in 286.24mm	10.924in 277.47mm	6.130in 155.70mm	4.755in 120.79mm
		2.10	11.239in 285.46mm	10.894in 276.70mm	6.160in 156.46mm	4.786in 121.56mm

Model CX with PA

With optional hydraulic motor mount provision
Clockwise input
CXVPA shown

Note: See drawing DPL82080 for additional details of PA transmission

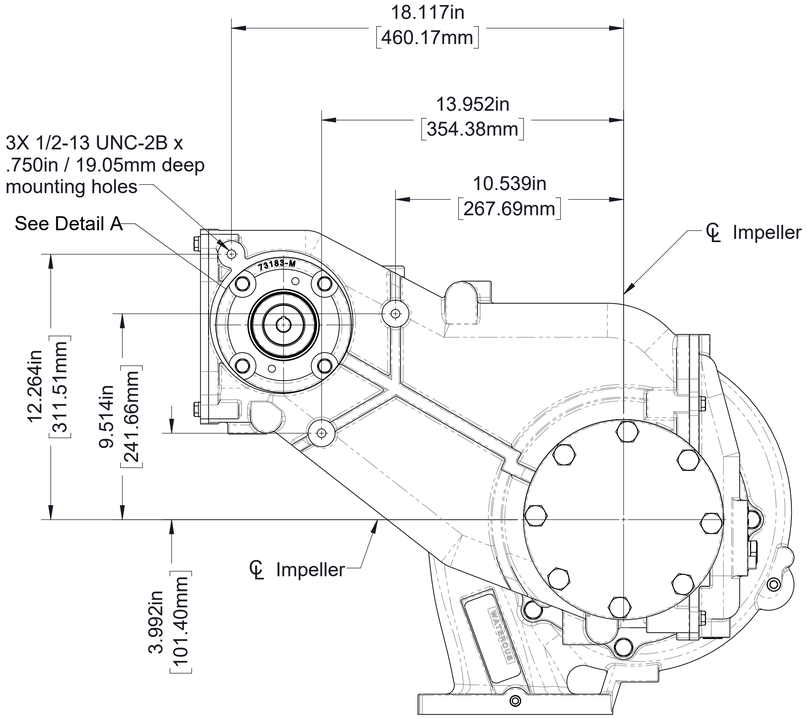

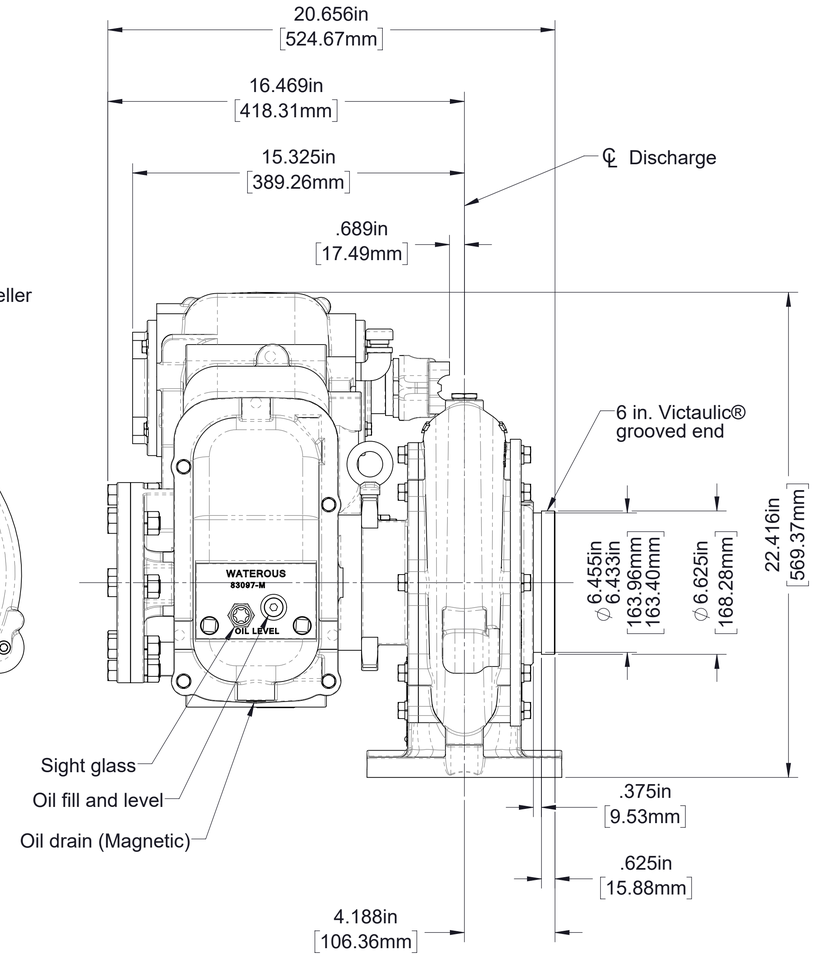

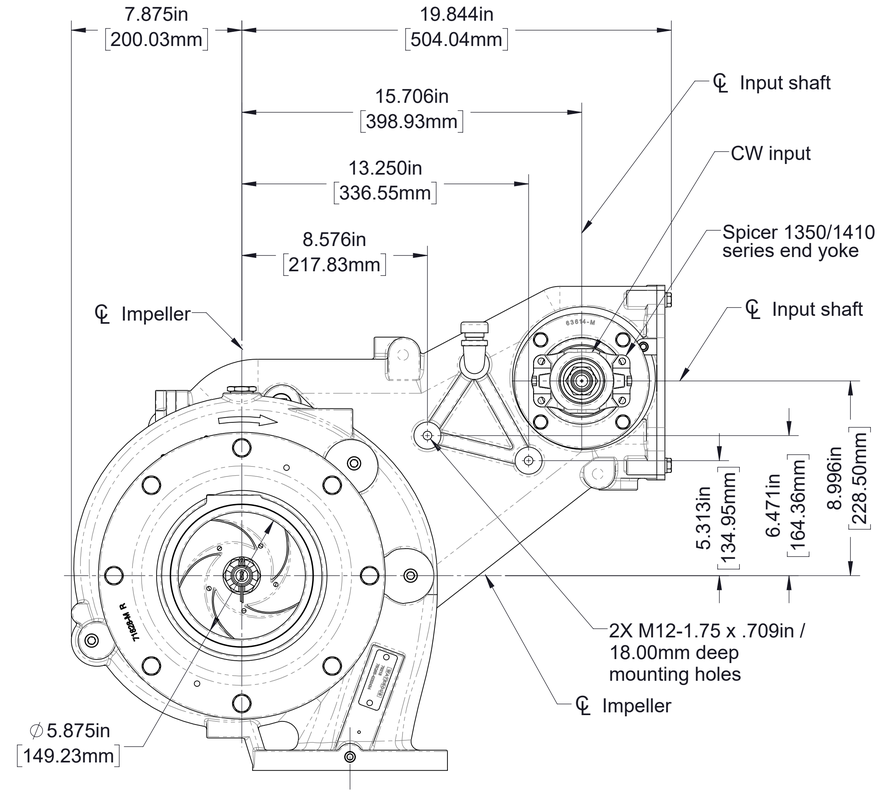

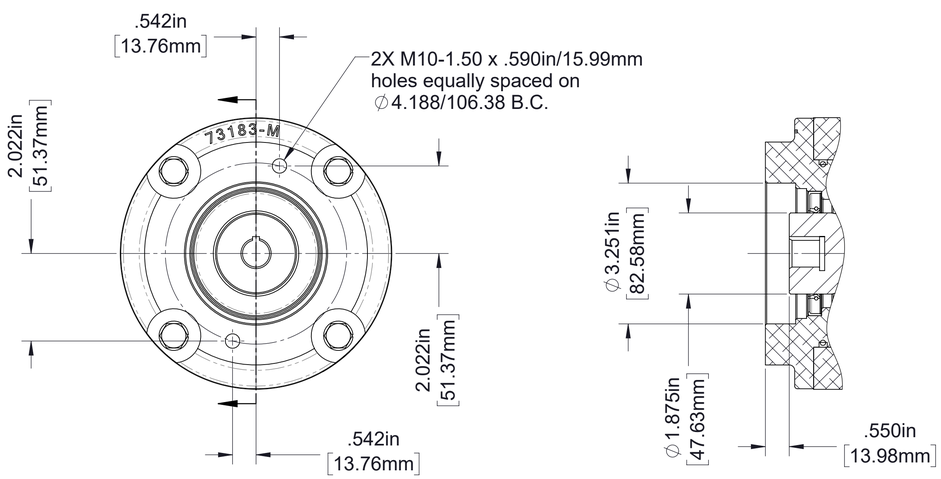

DETAIL A
Hydraulic Pump Adapter Flange
Used for SAE J744 class A 2-bolt hydraulic pump with male 5/8in keyed shaft

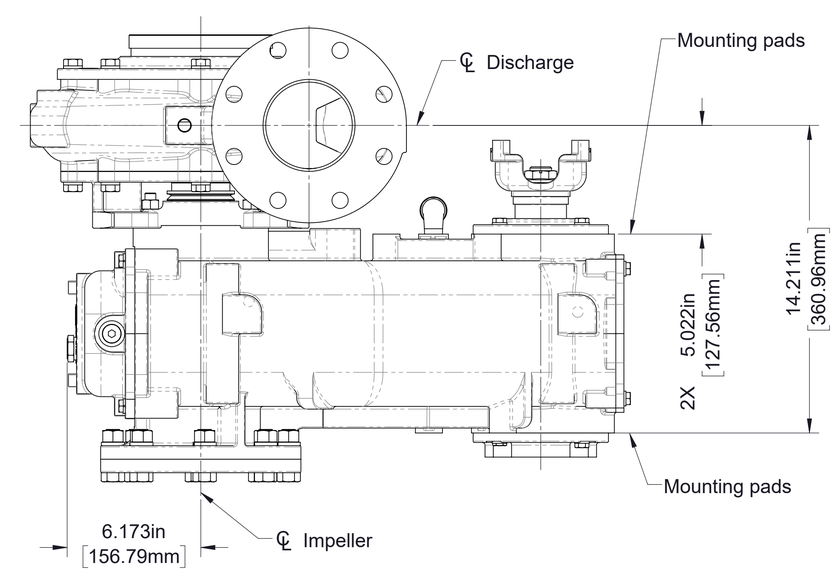

Model CXVQB

Front facing pump
Clockwise input
(CXV pumps only)

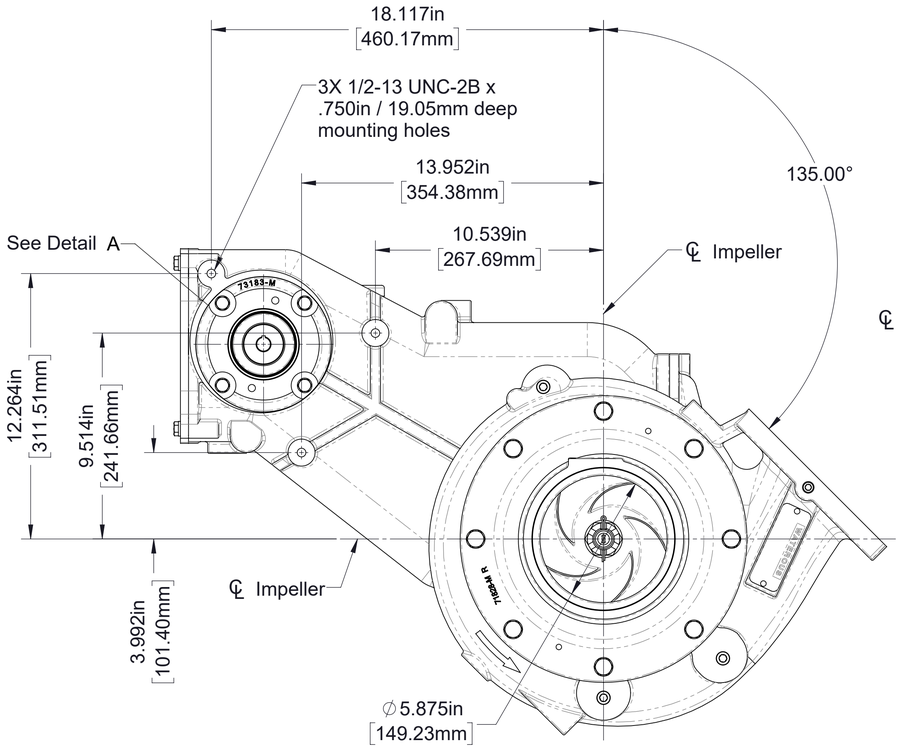

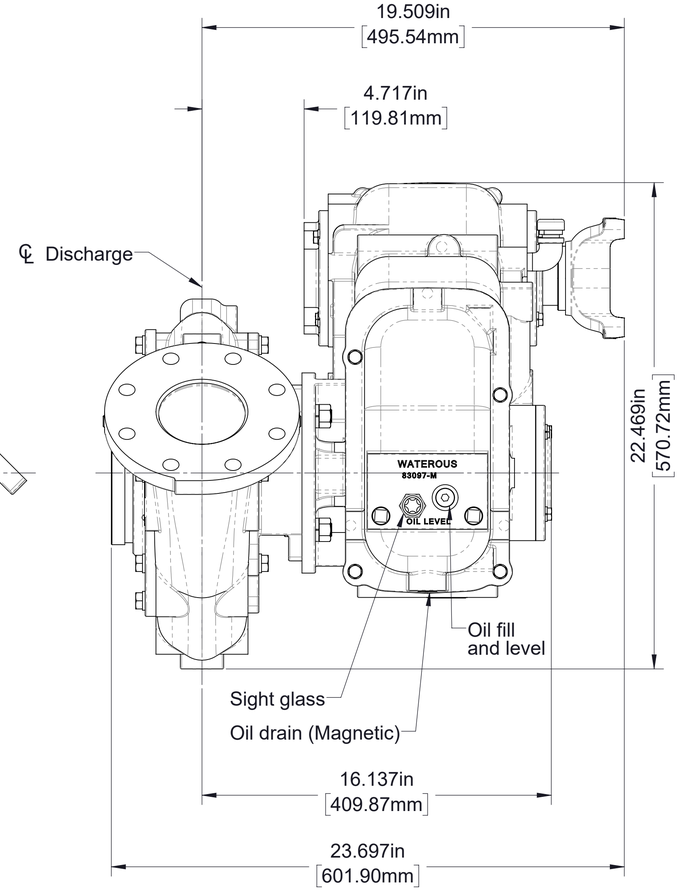

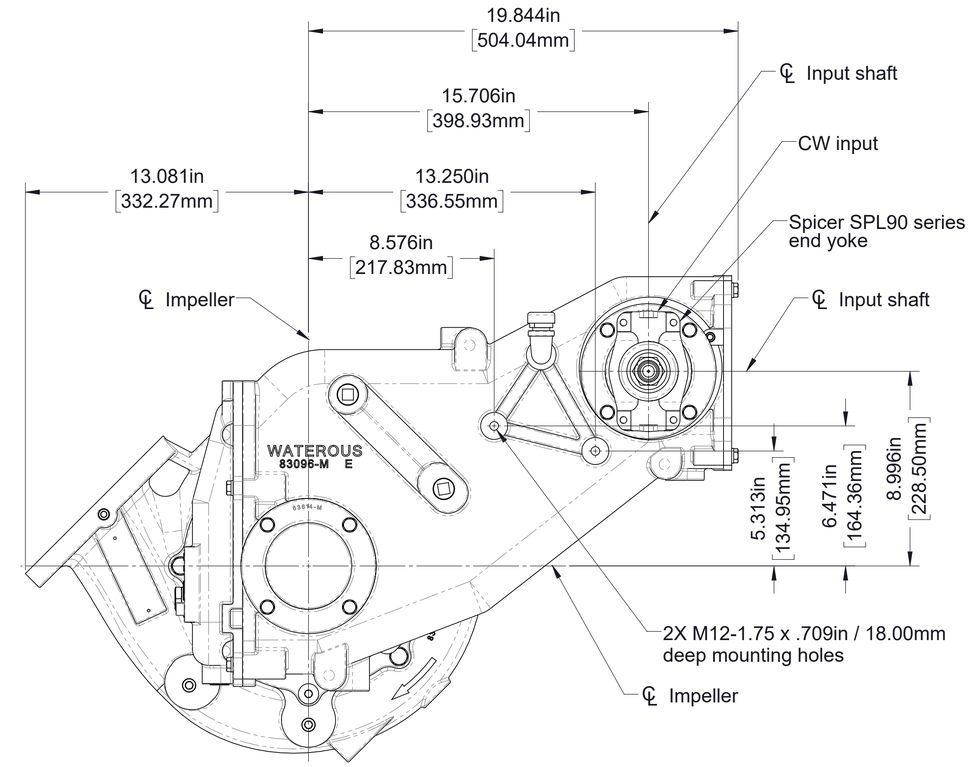

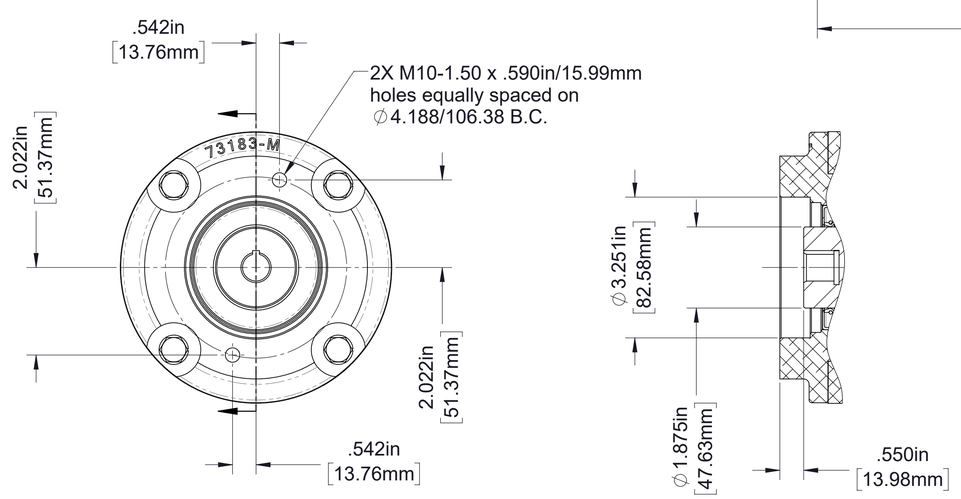

DETAIL A
Hydraulic Pump Adapter Flange
Used for SAE J744 class A 2-bolt hydraulic pump with male 5/8in keyed shaft

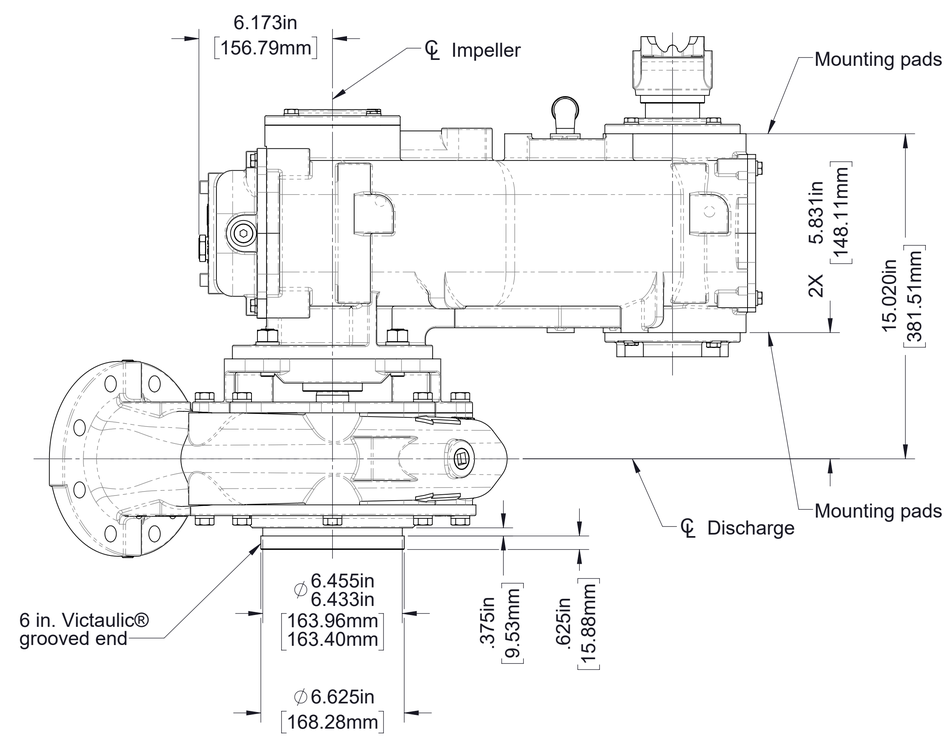

Model CXVQB

Rear facing pump
Clockwise input
(CXV pumps only)

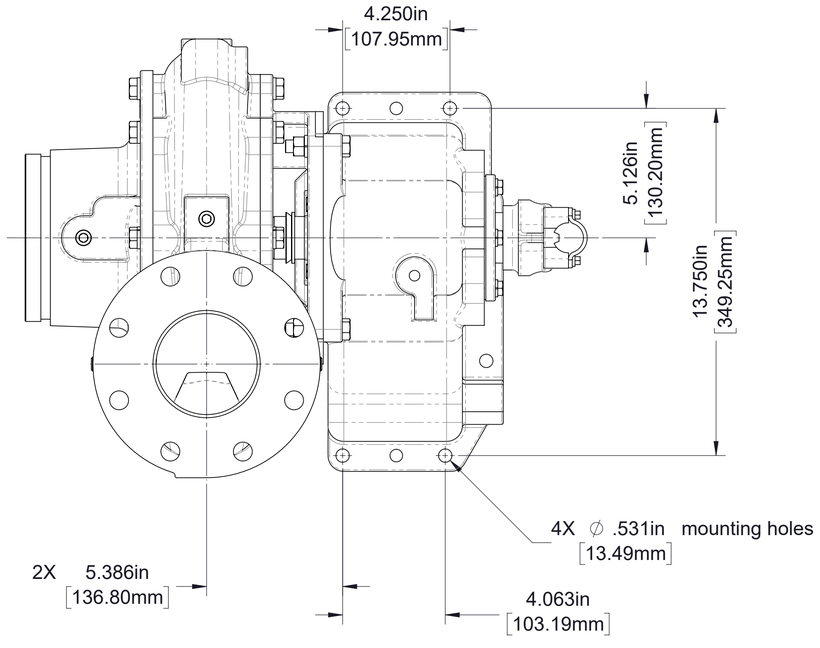

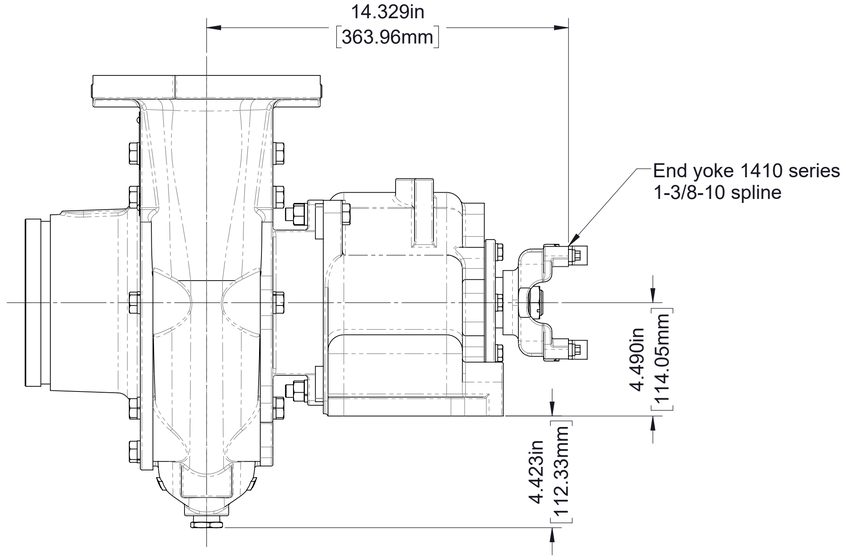

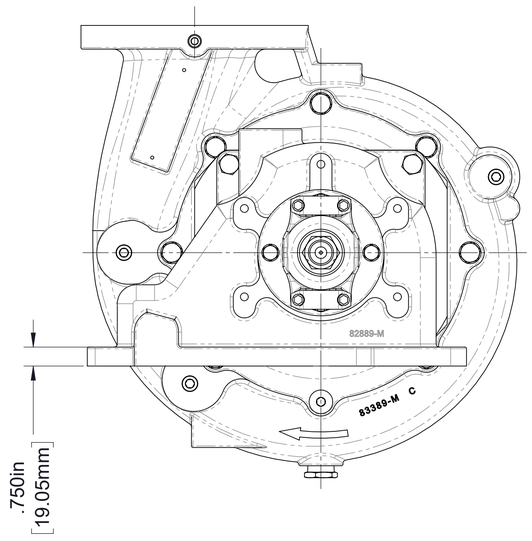

Model CX Direct Drive

Clockwise or Counterclockwise input
(Clockwise shown)
(CXV shown)

Discharge Position		Available with: Transmission Series: C20 Pump mounted on input shaft side	C20 Pump mounted on output shaft side	D	K	PA Vertical (Right)	PA Horizontal (Left)	QB	T	Discharge Manifold
Up	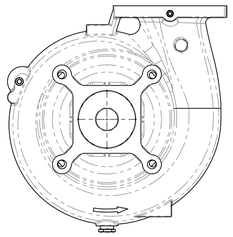	**Yes**	No	No	**Yes**	**Yes**	**Yes**	No	**Yes**	**Yes**
	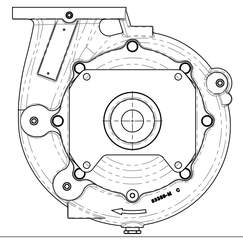	No	**Yes**	**Yes**	No	No	No	No	No	**Yes**
Left	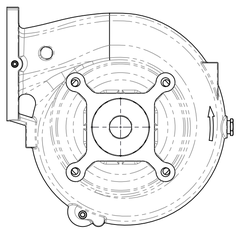	No	No	No	**Yes**	**Yes**	No	No	**Yes**	No
Down	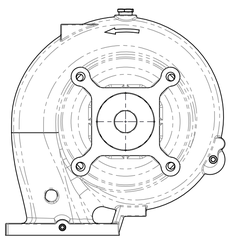	No	No	No	**Yes**	No	**Yes**	**Yes**	**Yes**	No
Right	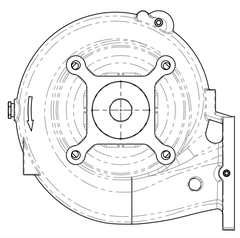	No	No	No	**Yes**	**Yes**	No	No	**Yes**	No
45°	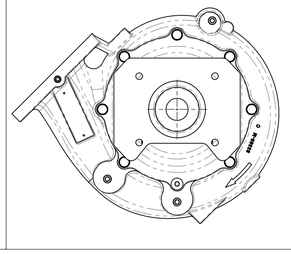	No	No	No	No	No	No	**Yes**	No	No
Clockwise (CW) Input Rotation										

Discharge Position		Available with: Transmission Series: D	K	QB	T	Discharge Manifold
Up	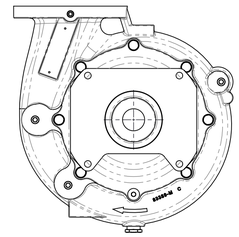	**No**	**Yes**	**No**	**Yes**	**Yes**
	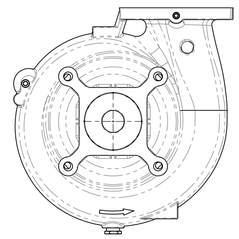	**Yes**	**No**	**No**	**No**	**Yes**
Left	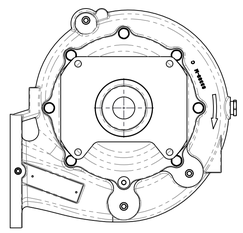	**No**	**Yes**	**No**	**Yes**	**No**
Down	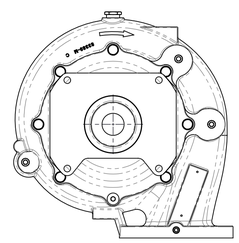	**No**	**Yes**	**No**	**Yes**	**No**
Right	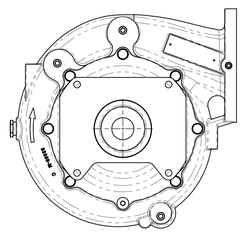	**No**	**Yes**	**No**	**Yes**	**No**
Counterclockwise (CCW) Input Rotation						

Available pump discharge positions as viewed from transmission end of pump

	Vertical	Inverted	Left	Right
K	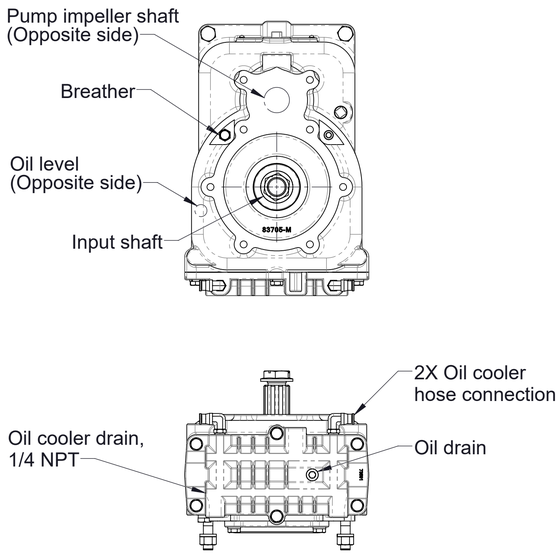	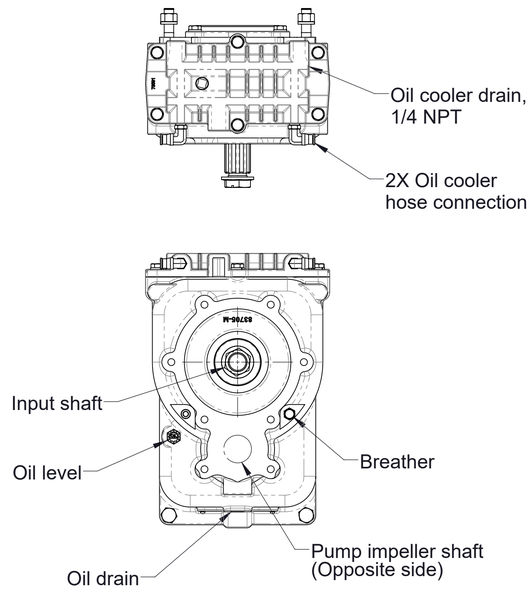	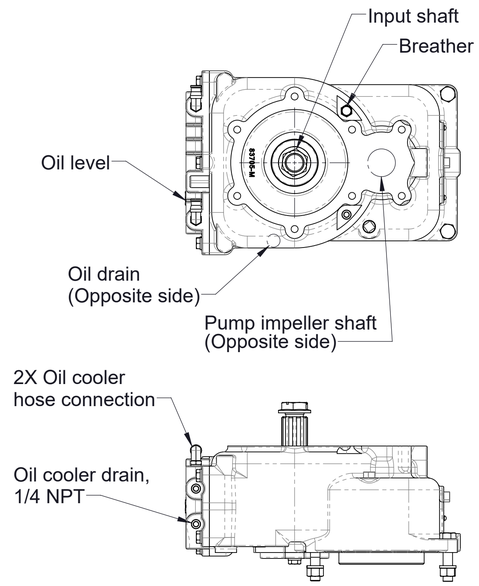	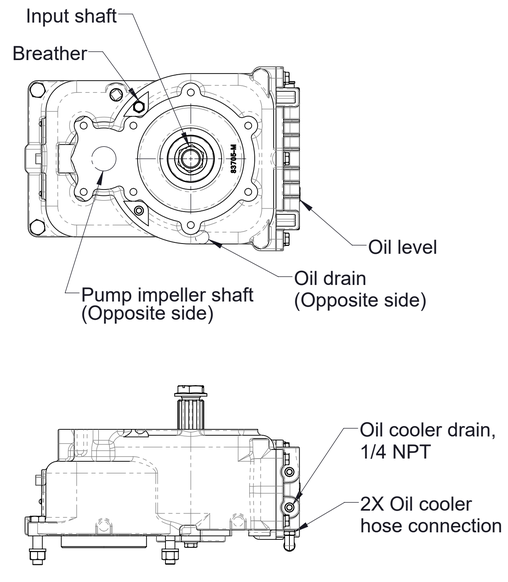
T	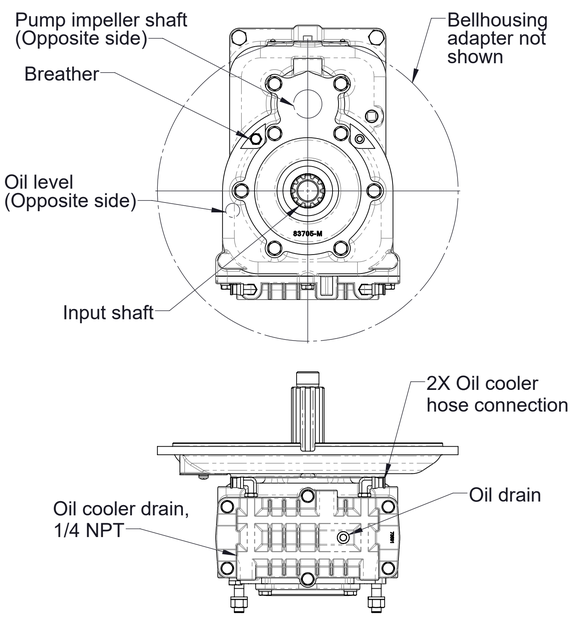 **(CXN and CXV only)**	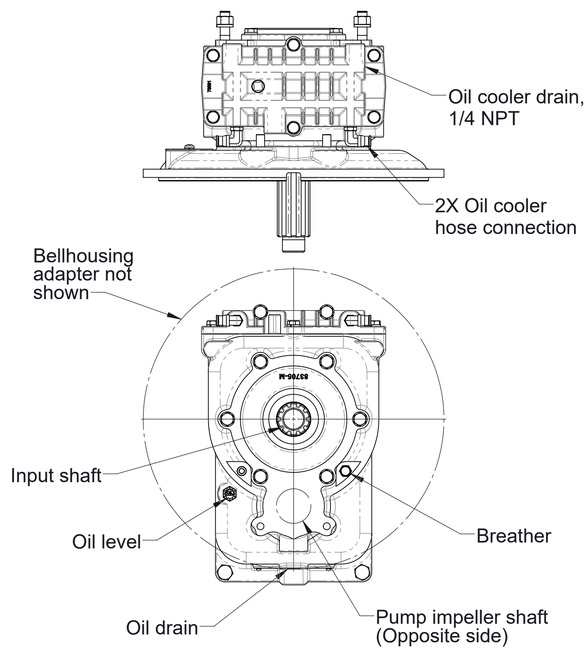 **(CXN and CXV only)**	**Not Available**	**Not Available**

Available transmission mounting positions as viewed from transmission input shaft

	Vertical (Transmission Input right of pump intake)	Left (Transmission input left of pump intake) (CXV and CXS only)
PA	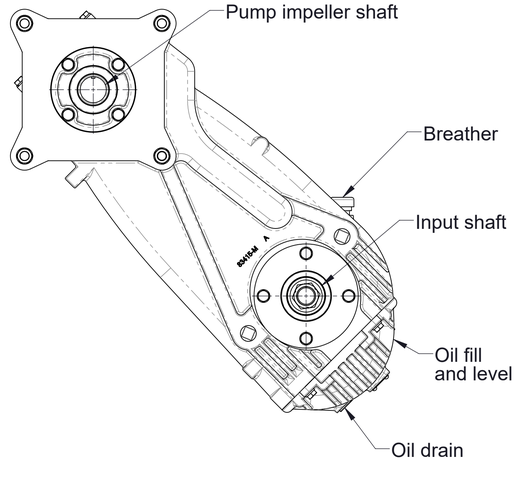	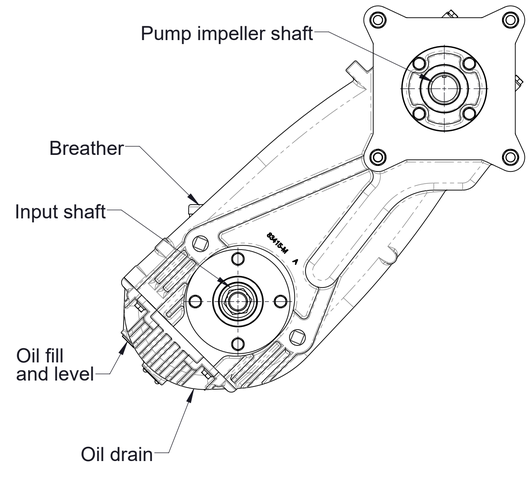

	Vertical (CXV only)
QB	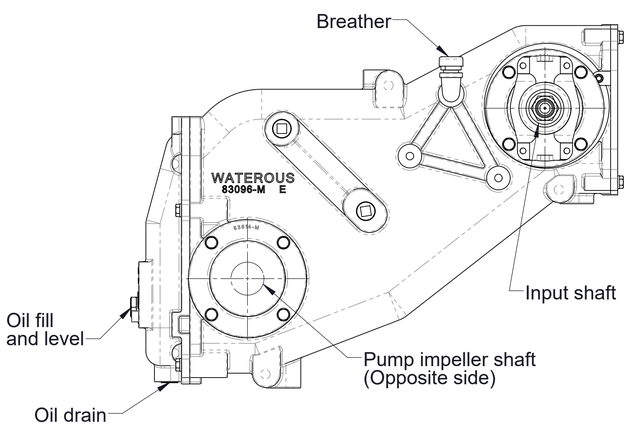

	Vertical
C20	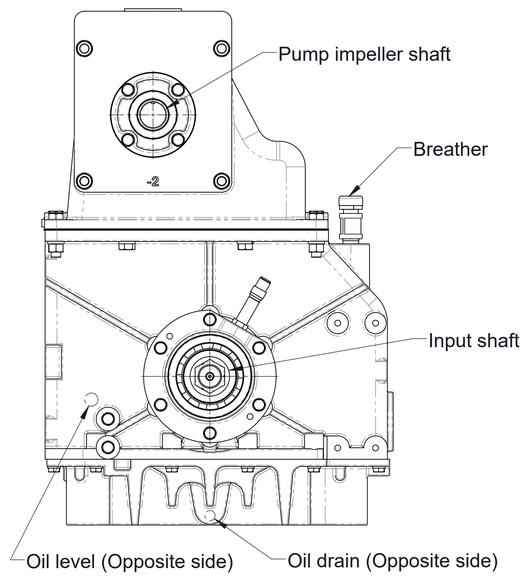

Available transmission mounting positions as viewed from transmission input shaft

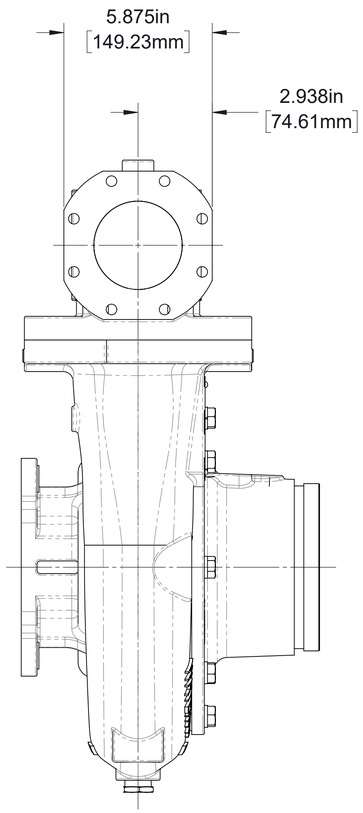

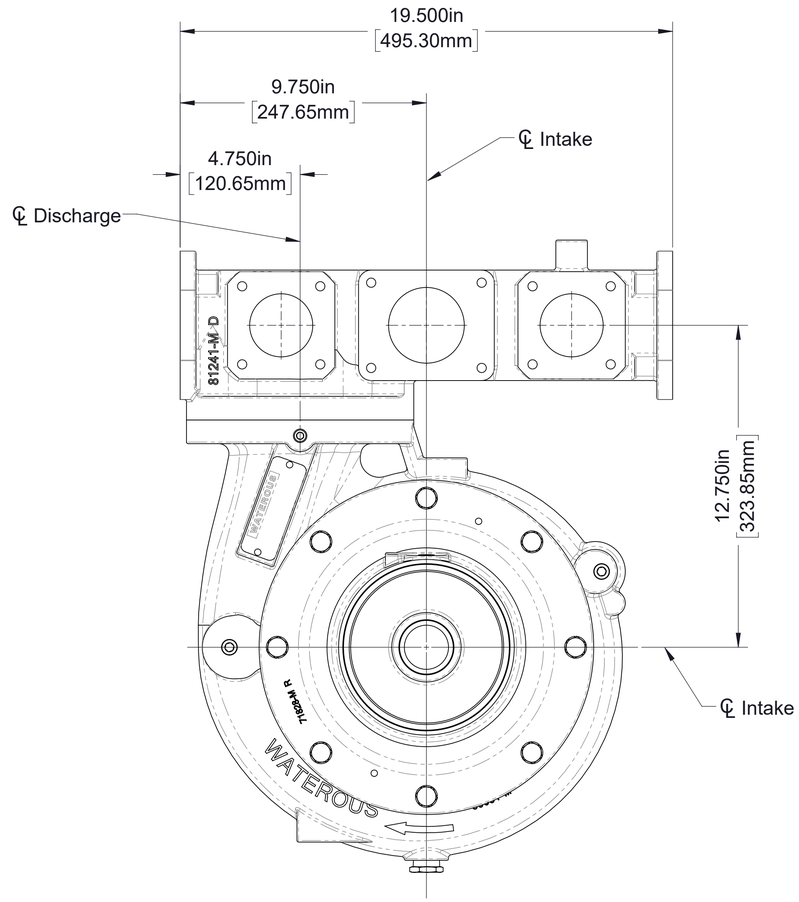

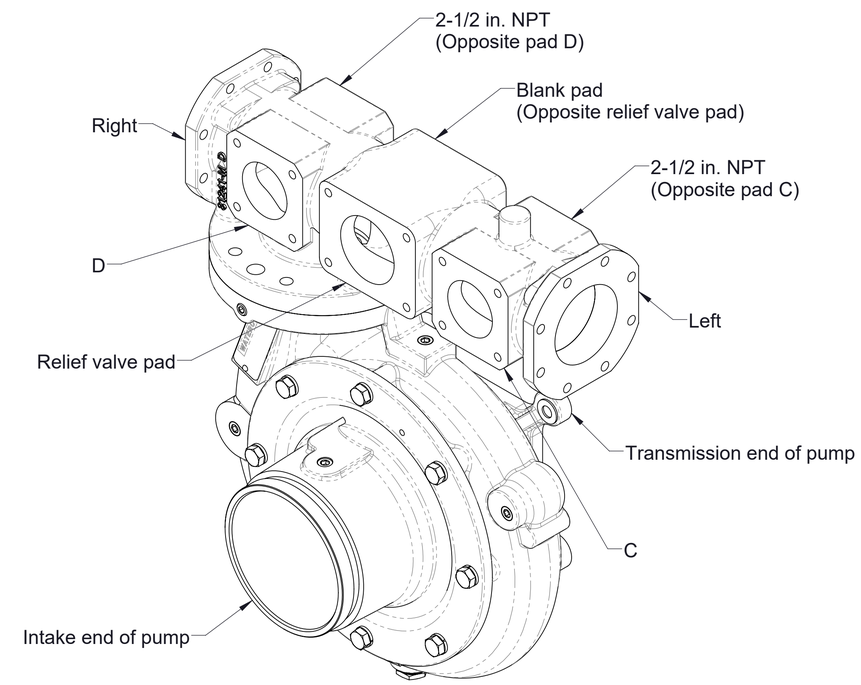

Pad	Size
Left	3-1/2 in. 8-bolt
Right	3-1/2 in. 8-bolt
Relief Valve	3 in. R.V.
C	2-1/2 in. 4-bolt
D	2-1/2 in. 4-bolt

Manifold with 3-1/2 in. end flanges mounted perpendicular to intake CW impeller rotation

(See page 9 for manifold dimensions not shown)

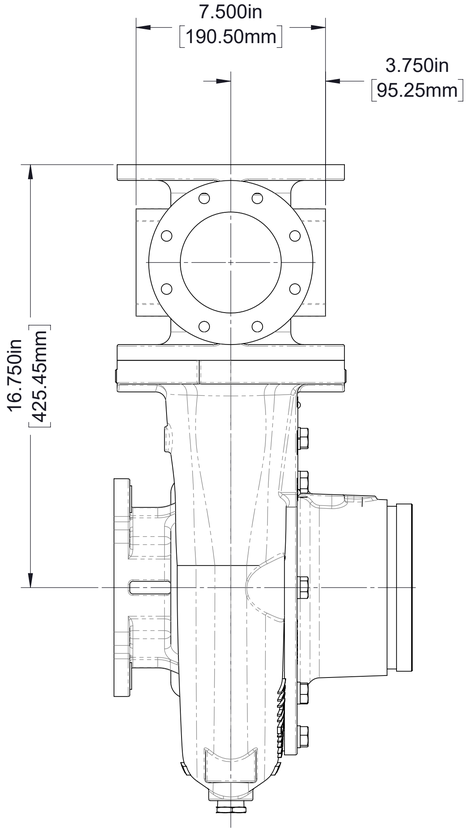

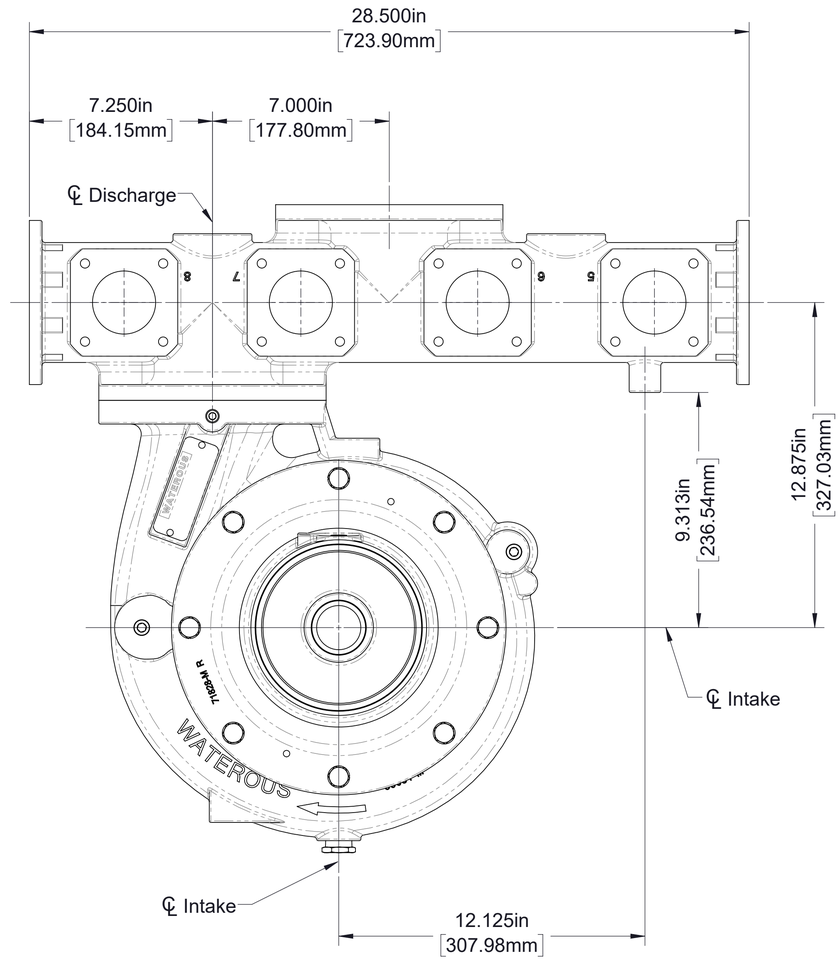

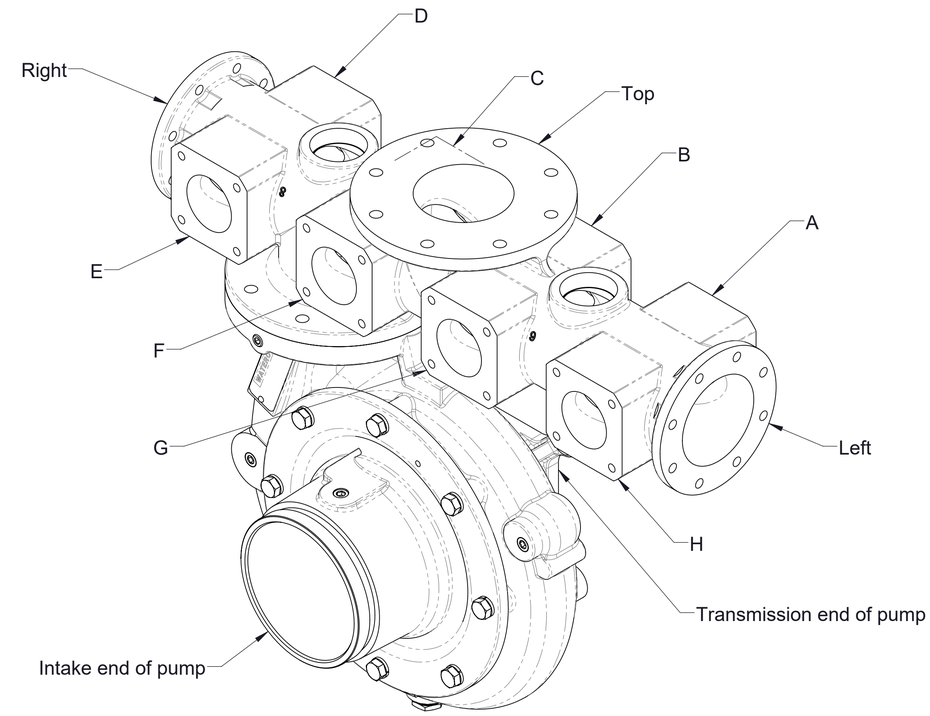

Pad	Size
Left	4 in. 8-bolt
Right	4 in. 8-bolt
Top	4 in. ANSI
A	2-1/2 in. 4-bolt
B	2-1/2 in. 4-bolt
C	2-1/2 in. 4-bolt
D	2-1/2 in. 4-bolt
E	2-1/2 in. 4-bolt
F	2-1/2 in. 4-bolt
G	2-1/2 in. 4-bolt
H	2-1/2 in. 4-bolt

Manifold with 4 in. end flanges mounted perpendicular to intake CW impeller rotation

(See page 10 for manifold dimensions not shown)

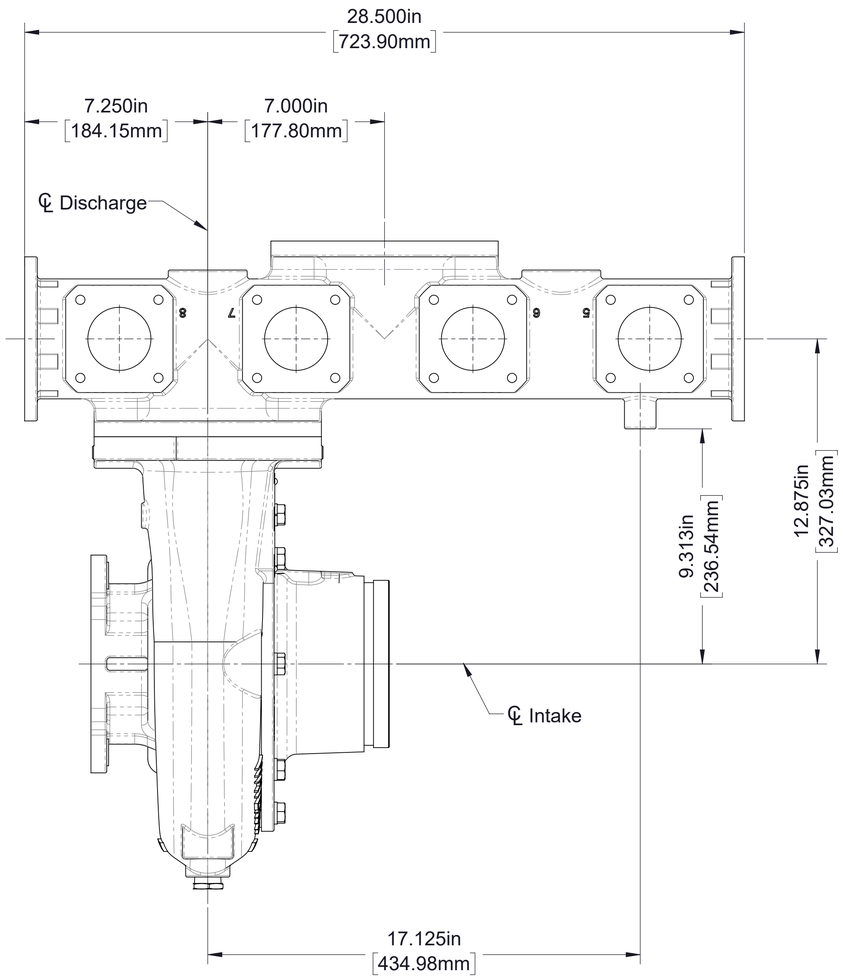

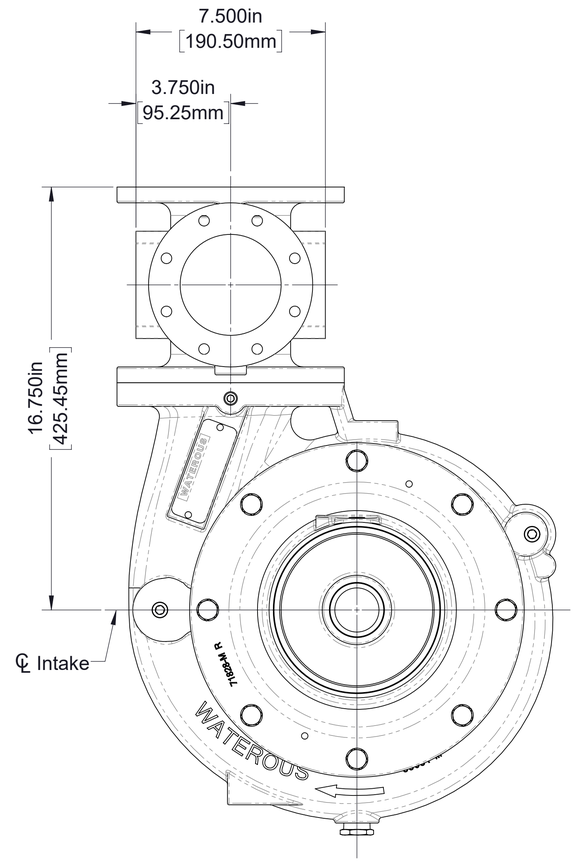

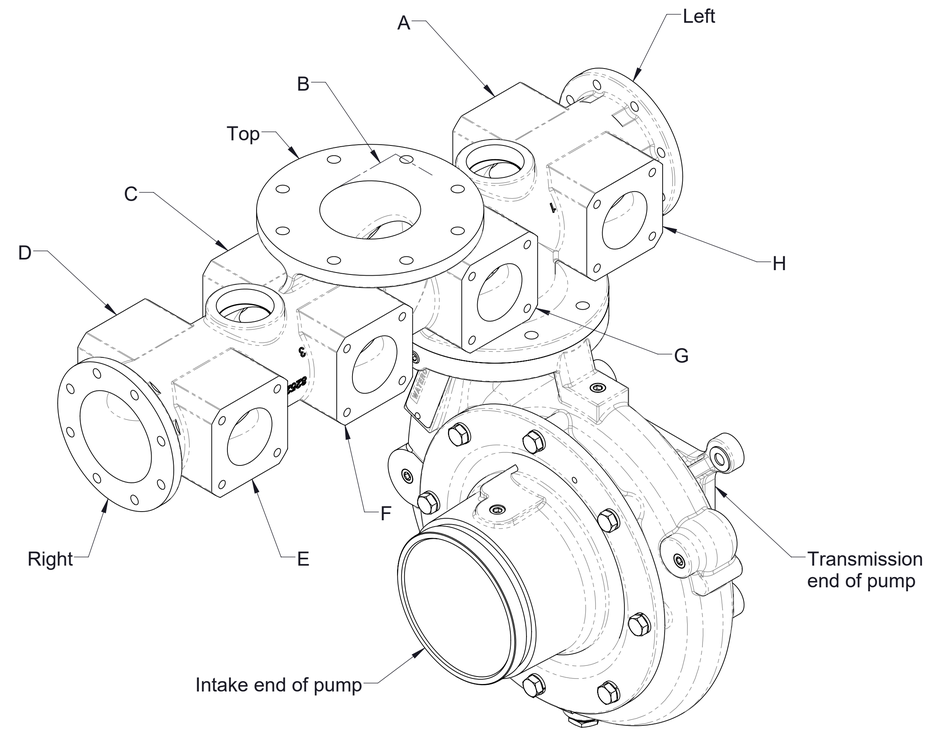

Pad	Size
Left	4 in. 8-bolt
Right	4 in. 8-bolt
Top	4 in. ANSI
A	2-1/2 in. 4-bolt
B	2-1/2 in. 4-bolt
C	2-1/2 in. 4-bolt
D	2-1/2 in. 4-bolt
E	2-1/2 in. 4-bolt
F	2-1/2 in. 4-bolt
G	2-1/2 in. 4-bolt
H	2-1/2 in. 4-bolt

Manifold with 4 in. end flanges mounted parallel to intake
CW impeller rotation

(See page 10 for manifold dimensions not shown)

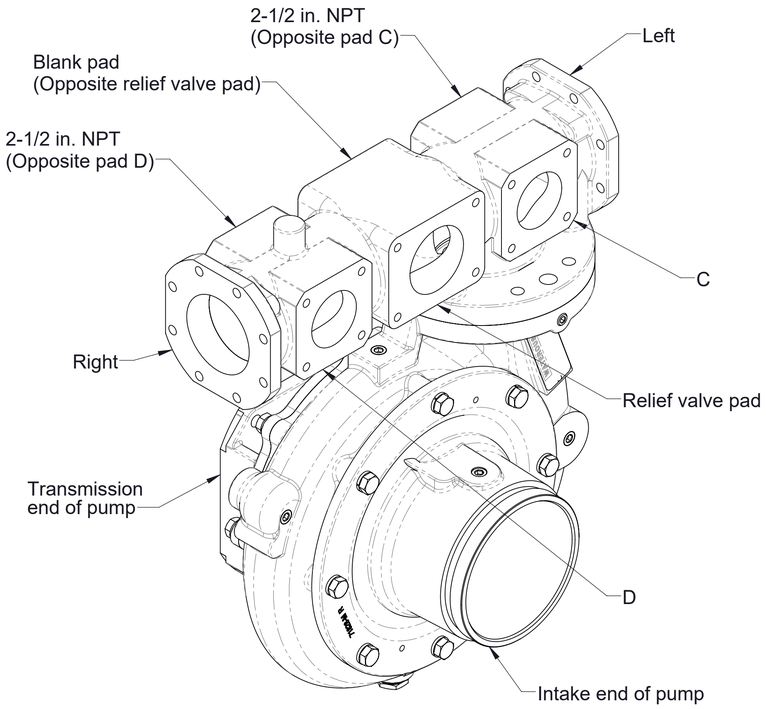

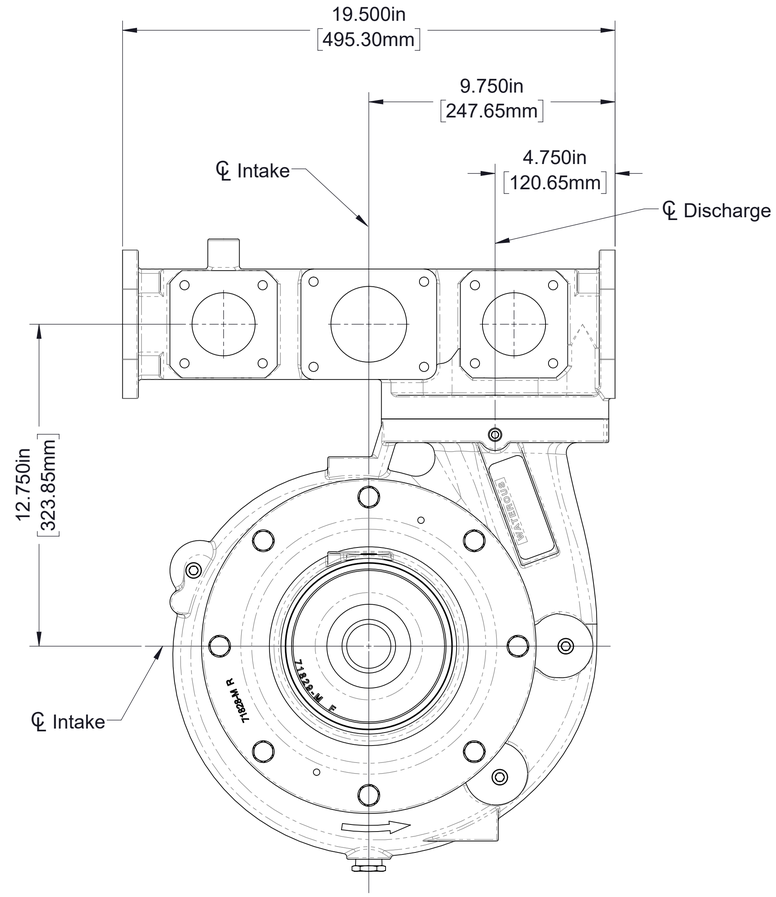

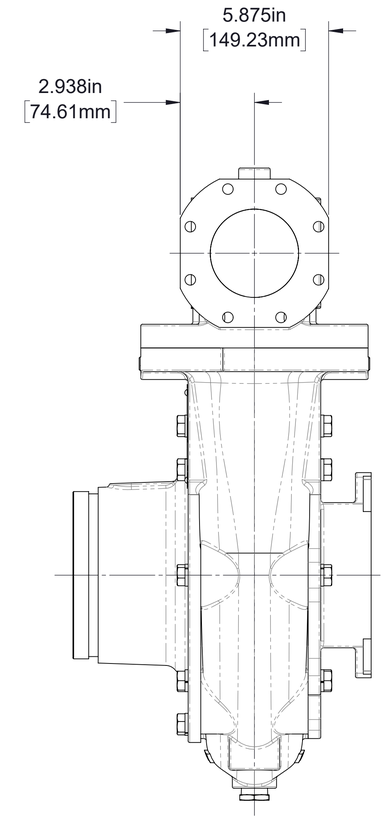

Pad	Size
Left	3-1/2 in. 8-bolt
Right	3-1/2 in. 8-bolt
Relief Valve	3 in. R.V.
C	2-1/2 in. 4-bolt
D	2-1/2 in. 4-bolt

Manifold with 3-1/2 in. end flanges mounted perpendicular to intake CCW impeller rotation

(See page 9 for manifold dimensions not shown)

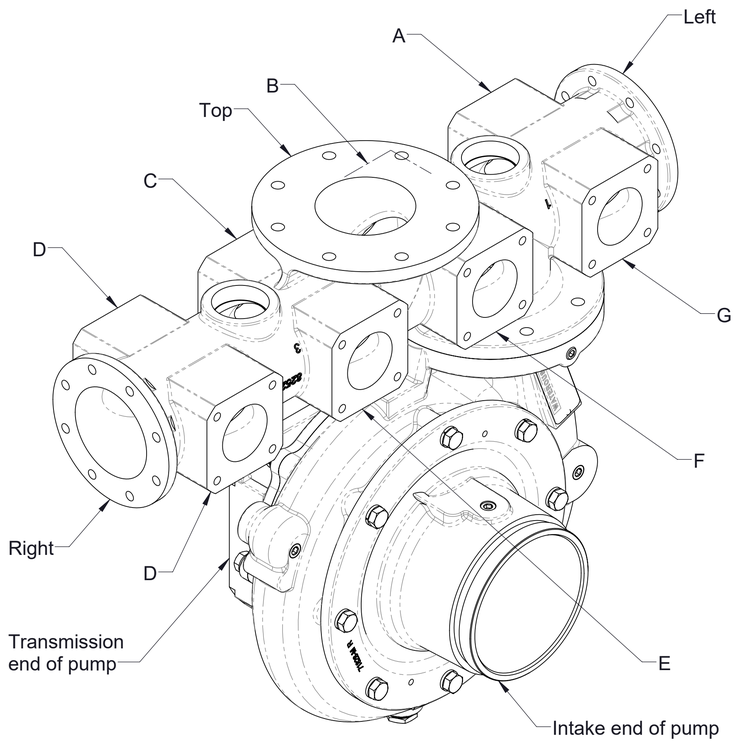

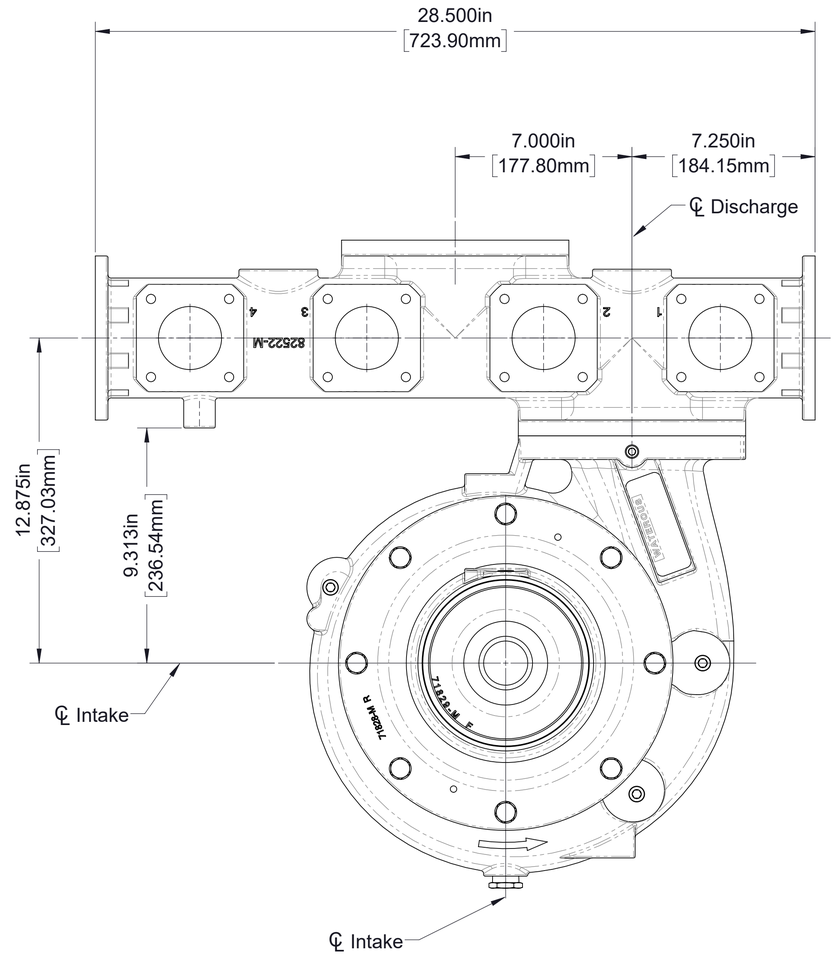

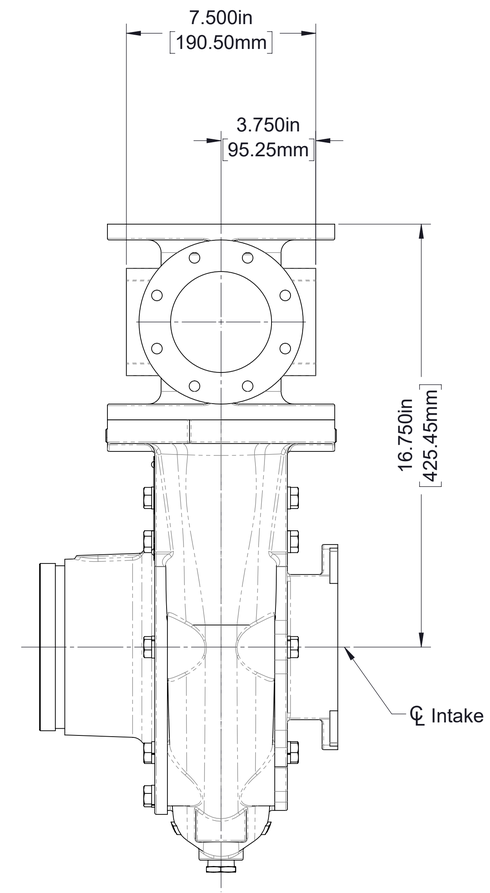

Pad	Size
Left	4 in. 8-bolt
Right	4 in. 8-bolt
Top	4 in. ANSI
A	2-1/2 in. 4-bolt
B	2-1/2 in. 4-bolt
C	2-1/2 in. 4-bolt
D	2-1/2 in. 4-bolt
E	2-1/2 in. 4-bolt
F	2-1/2 in. 4-bolt
G	2-1/2 in. 4-bolt
H	2-1/2 in. 4-bolt

Manifold with 4 in. end flanges mounted perpendicular to intake CCW impeller rotation

(See page 10 for manifold dimensions not shown)

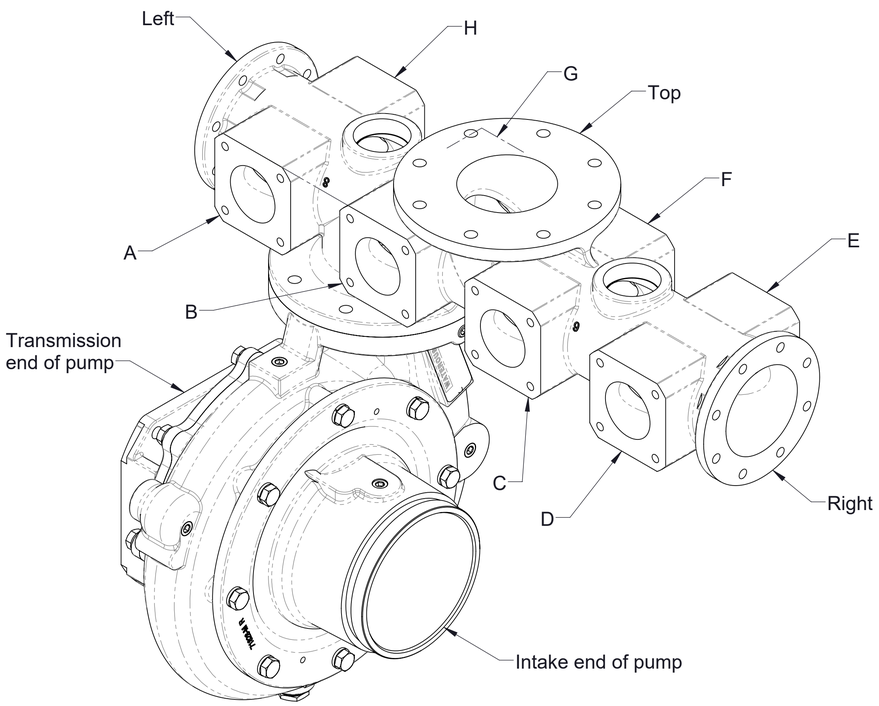

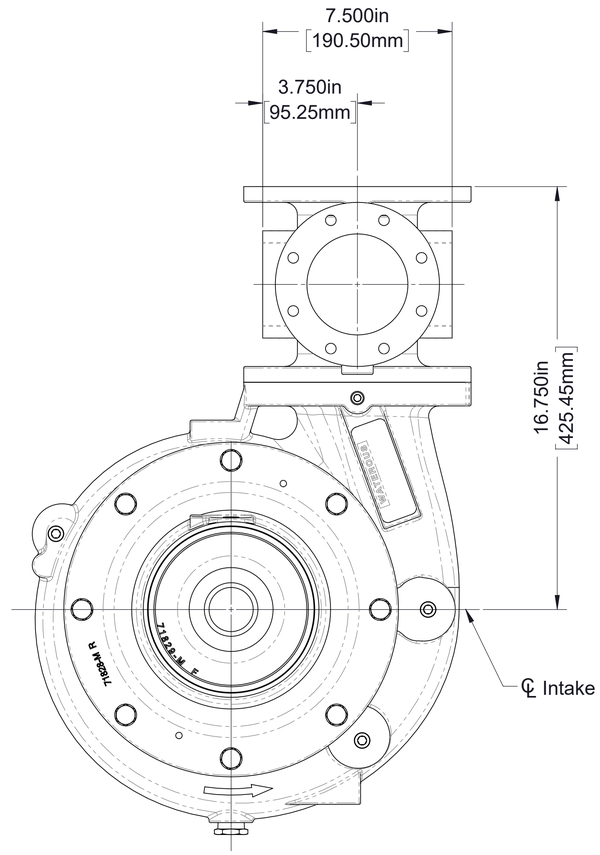

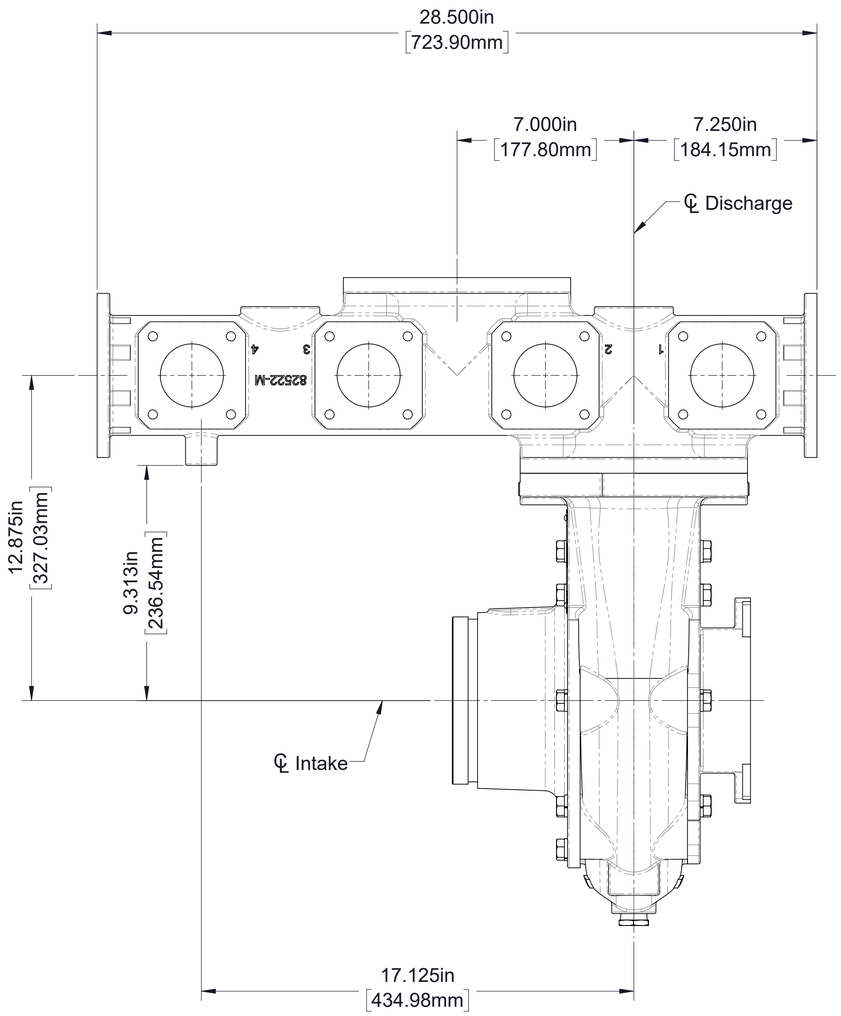

Pad	Size
Left	4 in. 8-bolt
Right	4 in. 8-bolt
Top	4 in. ANSI
A	2-1/2 in. 4-bolt
B	2-1/2 in. 4-bolt
C	2-1/2 in. 4-bolt
D	2-1/2 in. 4-bolt
E	2-1/2 in. 4-bolt
F	2-1/2 in. 4-bolt
G	2-1/2 in. 4-bolt
H	2-1/2 in. 4-bolt

Manifold with 4 in. end flanges mounted parallel to intake
CCW impeller rotation

(See page 10 for manifold dimensions not shown)