WATEROUS

Document Number	Issue Date	Rev. Date
SPL83904	01/30/23	01/30/23

CM/CMU '23 Impeller Shaft Assembly Service Parts List

Pump and Transmission Model	Impeller Shaft Type	Drive Location	Seal Type	See Sheet	
				Section View	Exploded View
CMC22, CMUC22 CMPA, CMUPA CMK, CMUK	Separable	Rear	Packing	2	3
			Mechanical Seals	4	5
		Front	Packing	6	7
			Mechanical Seals	8	9
CMD, CMUD	One-Piece	Rear	Packing	10	11
			Mechanical Seals	12	13
		Front	Packing	14	15
			Mechanical Seals	16	17
Mechanical Seal Kits				18	

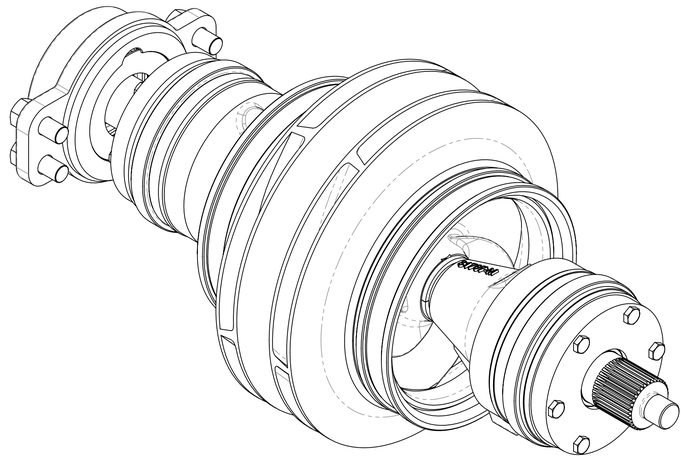

Ref No.	Description	Ref No.	Description
100	Bearing, Ball, Single Row, Double Shield, 35 x 80 x 21 mm	129	Gasket-Seal, Housing
101	Gland-Half	130	Ring-Lantern
102	Lock Ring Assy	131	Stud-Coarse, 5/16-18 x 1-3/4 in
103	Seal-Interstage	132	Nut-Unbalanced
104	Shaft-Impeller	133	Washer-Flat, 5/16 in
108	Screw-Hex Hd, 1/2-13 x 1-1/4 in	134	Housing-Seal (Includes 112 and 131)
109	Washer-Lock, 1/2 in	135	Packing Kit, Split Ring, BRG (Kit Includes 10 rings)
110	Key-Square, 5/16 x 1-3/8 in	136	Ring-Retaining, Internal, 3-5/32 in Bore Dia
112	Pin-Dowel, 1/4 x 1/2 in	137	Plug-Seal Housing
113	Ring-Retaining, Kit	138	Shield-Bearing
119	Ring-Retaining, External, 1-3/8 in Shaft Dia	300	Ring-Wear
125	Housing-Bearing	301	Impeller, First Stage
126	V-Ring, Flinger	302	Impeller, Second Stage

Note:
1. Entire Impeller shaft assembly as shown can be ordered as a replacement.

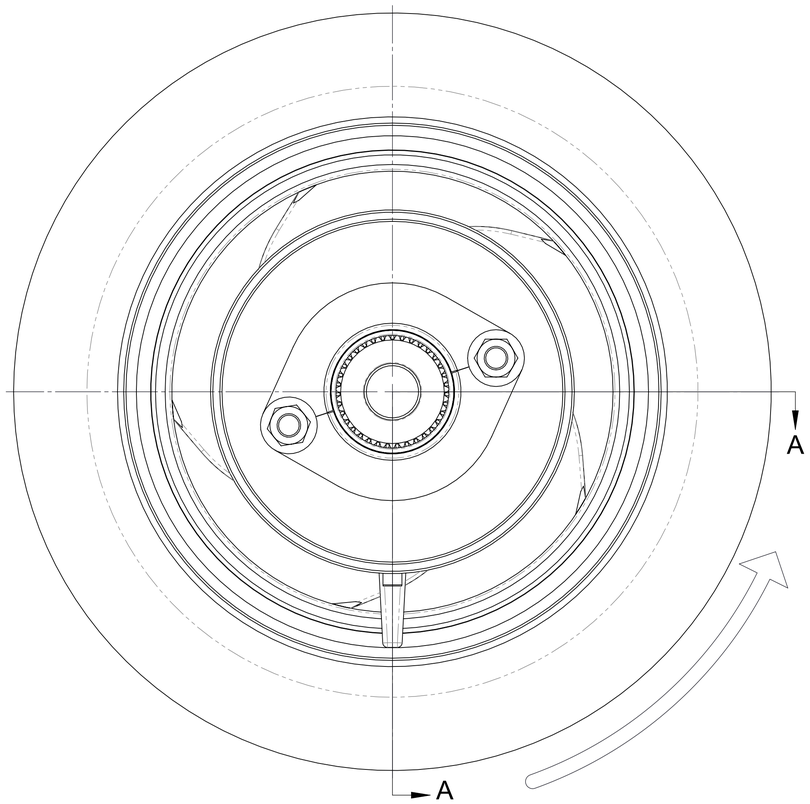

Looking into eye of first stage impeller

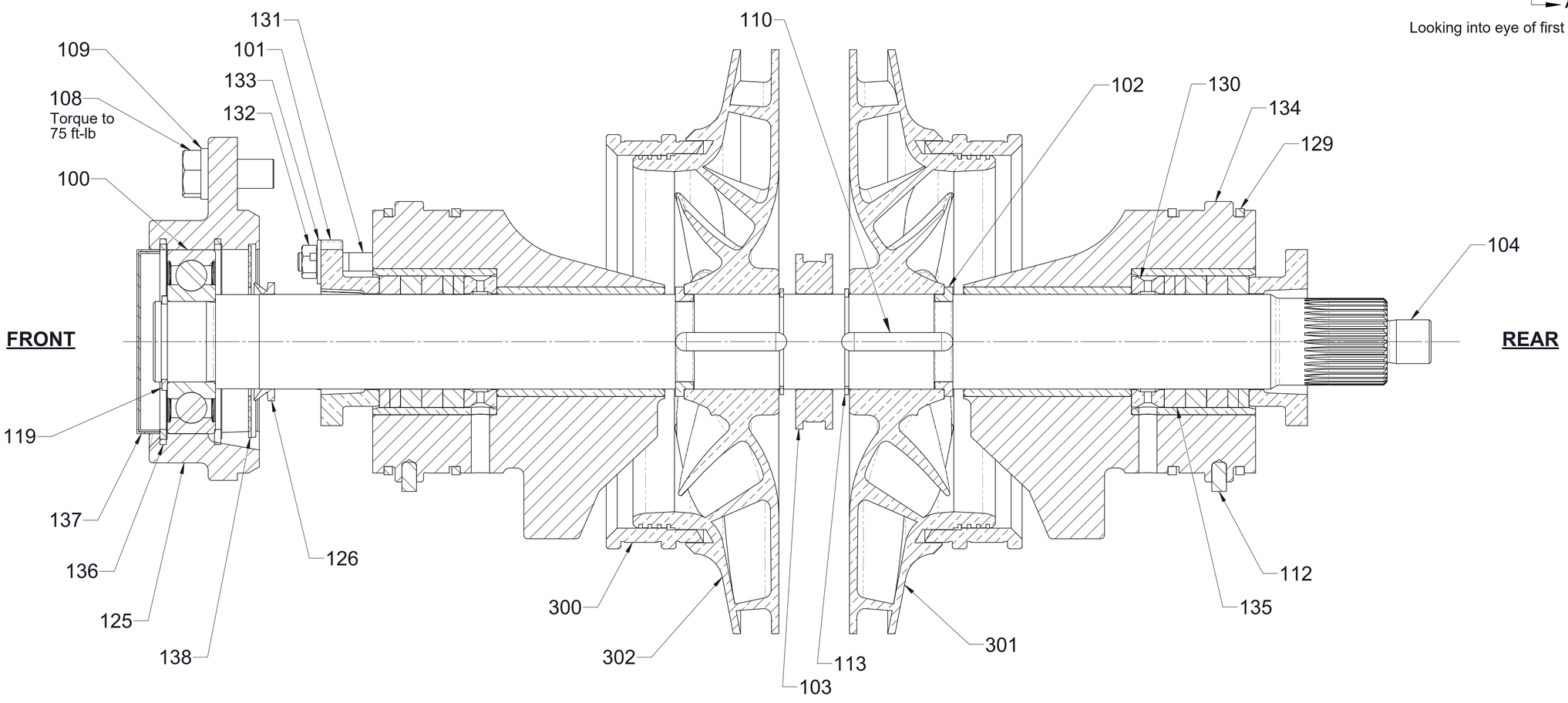

Section A-A

CM, CMU
Separable Shaft with Packing
Rear Drive
(CMU Shown)

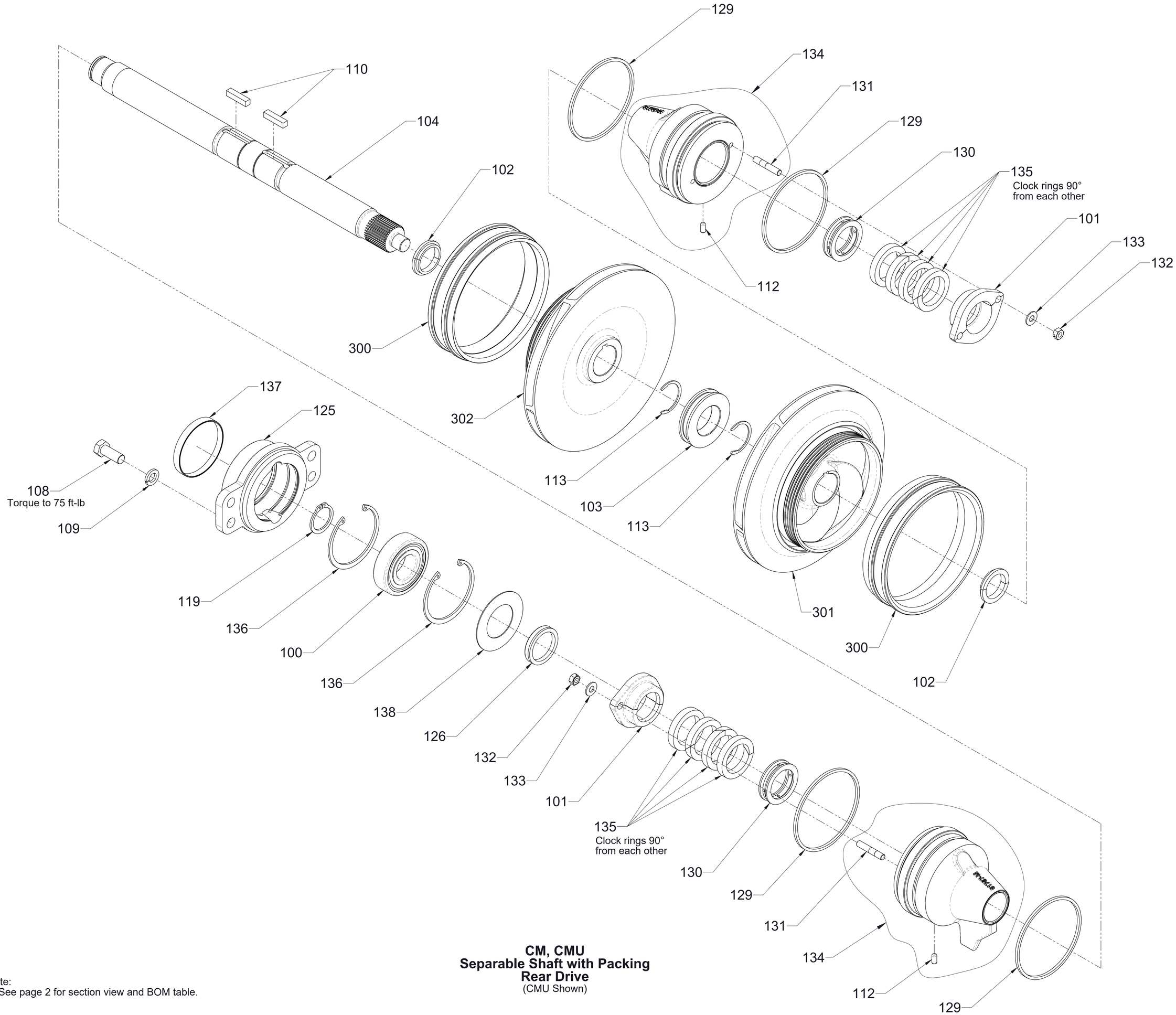

CM, CMU
Separable Shaft with Packing
Rear Drive
(CMU Shown)

Note:
1. See page 2 for section view and BOM table.

Ref No.	Description	Ref No.	Description
200	Bearing, Ball, Single Row, Double Shield, 35 x 80 x 21 mm	224	Ring-Retaining, External, 1-1/2 in Shaft Dia
201	Cover-Seal, Housing	225	Bushing-Stuffing Box Cover
202	Lock Ring Assy	230	Housing-Bearing
203	Seal-Interstage	237	Seal-Mechanical, Kit, Outboard end (See Detail A, Page 18)
204	Shaft-Impeller, Separable, Mech-Seal	238	Seal-Mechanical
208	Screw-Hex Hd, 1/2-13 x 1-1/4 in	240	Gasket-Seal, Housing
209	Washer-Lock, 1/2 in	241	Housing-Seal, Mech Seal (Includes 212)
210	Key-Square, 5/16 x 1-3/8 in	242	Ring-Retaining, Internal, 3-5/32 in Bore Dia
212	Pin-Dowel, 1/4 x 1/2 in	243	Plug-Seal Housing
213	Ring-Retaining, Kit	244	Shield-Bearing
219	Ring-Retaining, External, 1-3/8 in Shaft Dia	300	Ring-Wear
222	O-Ring, 3 x 3-1/4 in	301	Impeller, First Stage
223	Screw-Hex Hd, 1/4-20 x 1 in	302	Impeller, Second Stage

Note:
1. Entire Impeller shaft assembly as shown can be ordered as a replacement.

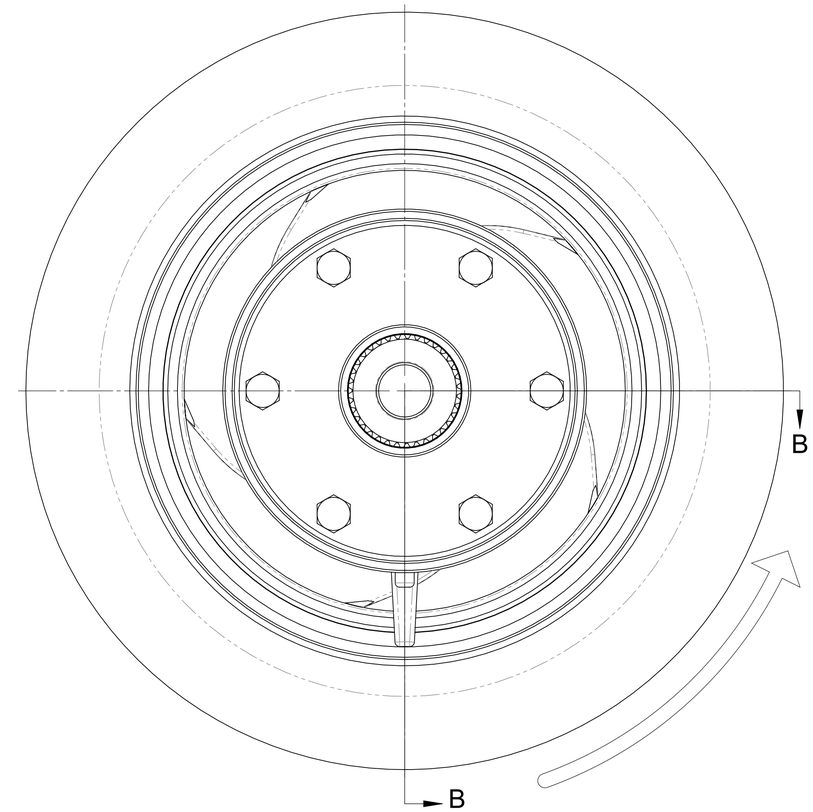

Looking into eye of first stage impeller

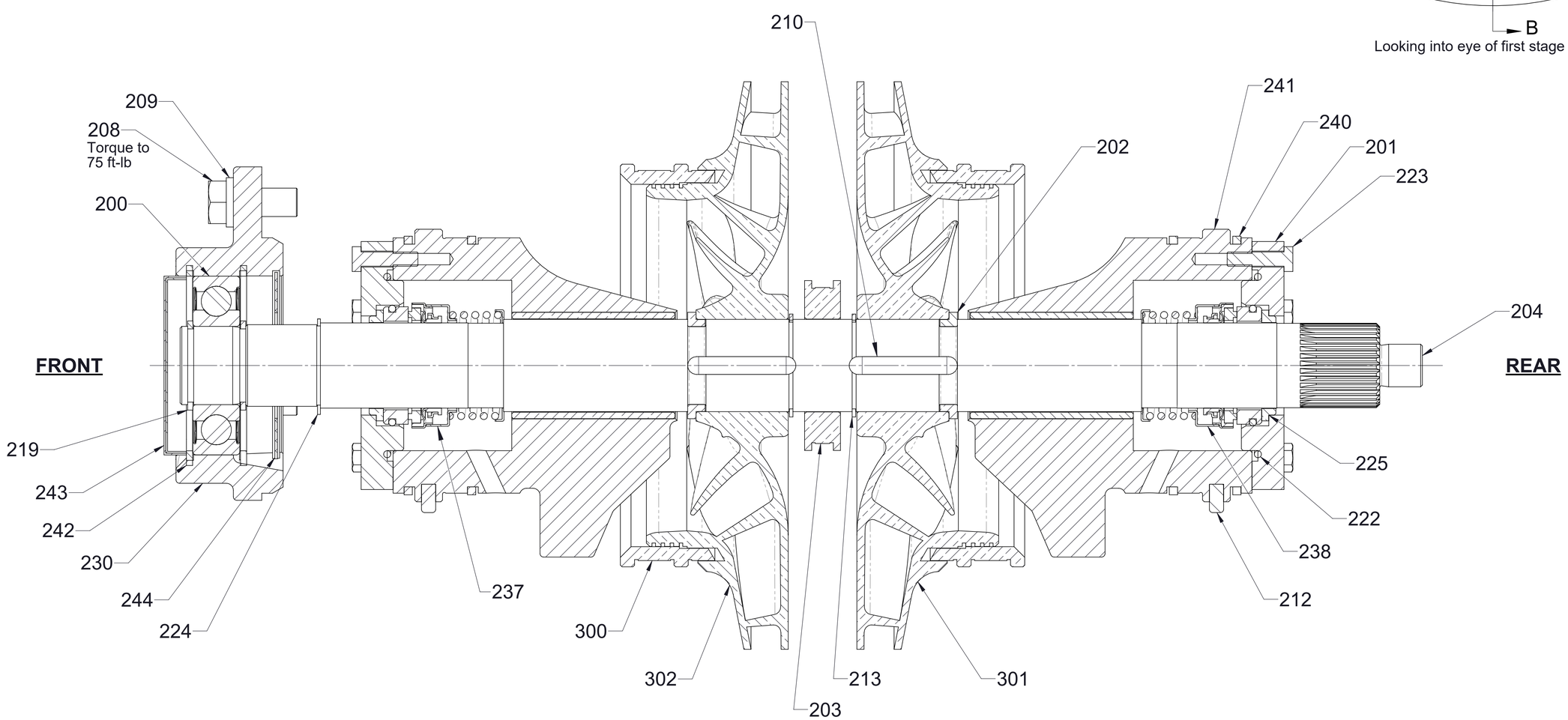

Section B-B

CM, CMU
Separable Shaft with Mechanical Seals
Rear Drive
(CMU Shown)

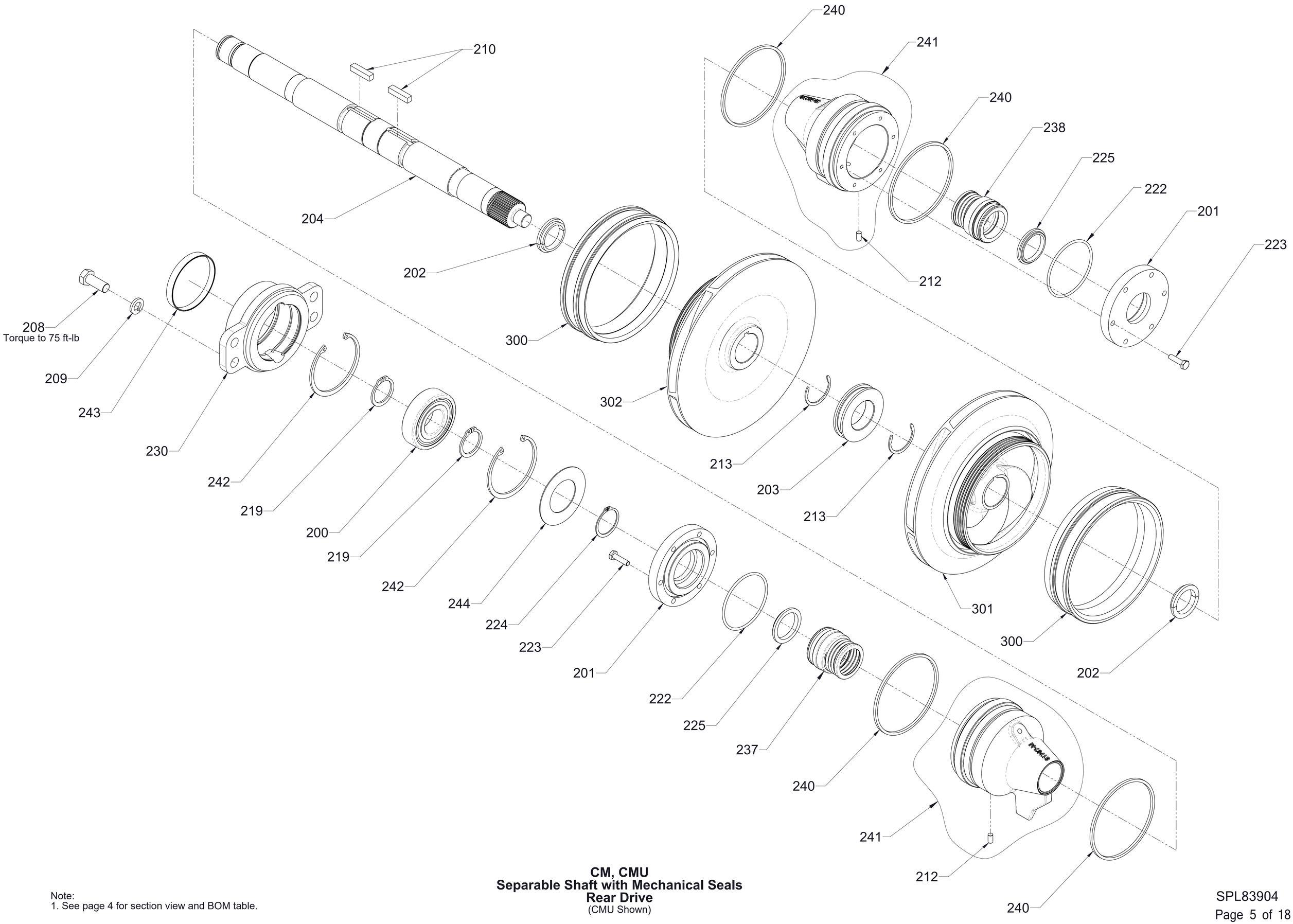

CM, CMU
Separable Shaft with Mechanical Seals
Rear Drive
(CMU Shown)

Note:
1. See page 4 for section view and BOM table.

Ref No.	Description
100	Bearing, Ball, Single Row, Double Shield, 35 x 80 x 21 mm
101	Gland-Half
102	Lock Ring Assy
103	Seal-Interstage
104	Shaft-Impeller
105	Nut-Hex, 1/2-20
107	Screw-Hex Hd, 1/2-20 x 2 in
109	Washer-Lock, 1/2 in
110	Key-Square, 5/16 x 1-3/8 in
112	Pin-Dowel, 1/4 x 1/2 in
113	Ring-Retaining
119	Ring-Retaining, External, 1-3/8 in Shaft Dia
125	Housing-Bearing
126	V-Ring, Flinger

Ref No.	Description
129	Gasket-Seal, Housing
130	Ring-Lantern
131	Stud-Coarse, 5/16-18 x 1-3/4 in
132	Nut-Unbalanced
133	Washer-Flat, 5/16 in
134	Housing-Seal (Includes 112 and 131)
135	Packing Kit, Split Ring, BRG (Kit Includes 10 rings)
136	Ring-Retaining, Internal, 3-5/32 in Bore Dia
137	Plug-Seal Housing
138	Shield-Bearing
300	Ring-Wear
301	Impeller, First Stage
302	Impeller, Second Stage

Note:
1. Entire Impeller shaft assembly as shown can be ordered as a replacement.

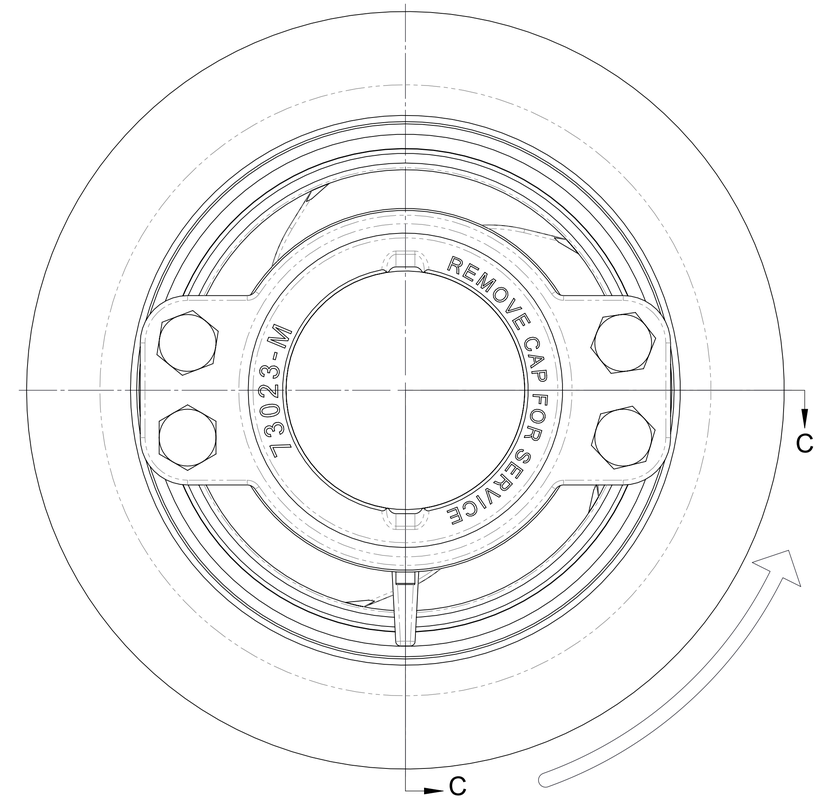

Looking into eye of first stage impeller

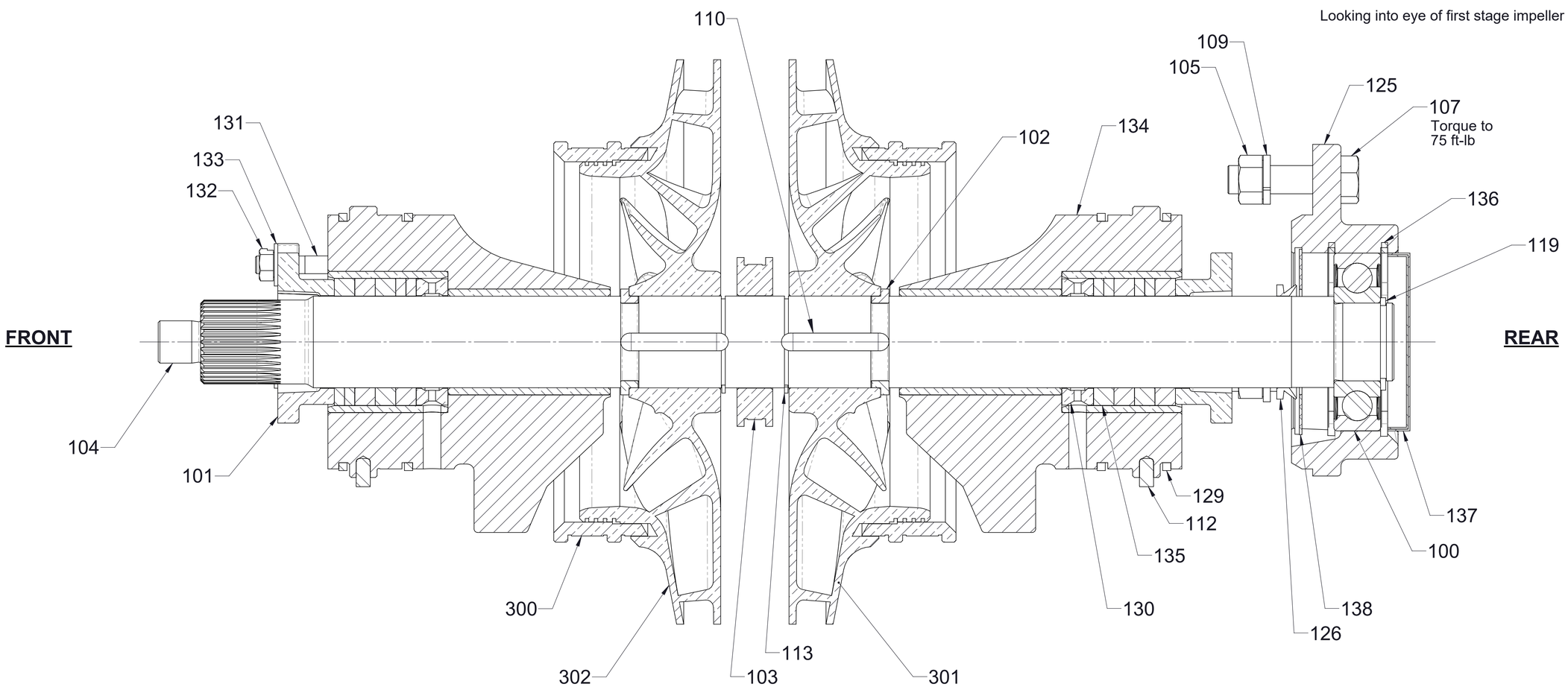

Section C-C

CM, CMU
Separable Shaft with Packing
Front Drive
(CMU Shown)

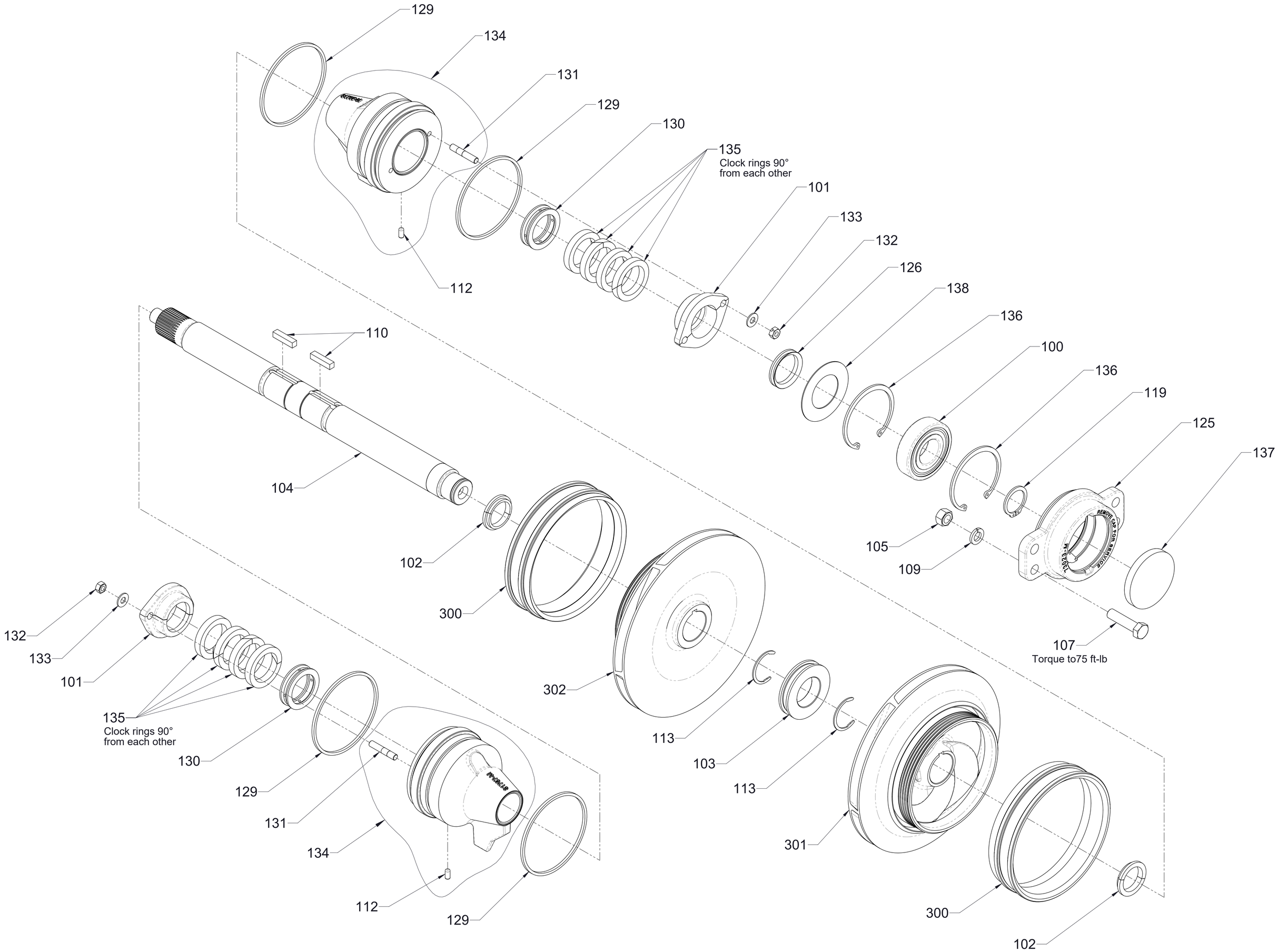

Note:
1. See page 6 for section view and BOM table.

CM, CMU
Separable Shaft with Packing
Front Drive
(CMU Shown)

Ref No.	Description	Ref No.	Description
200	Bearing, Ball, Single Row, Double Shield, 35 x 80 x 21 mm	224	Ring-Retaining, External, 1-1/2 in Shaft Dia
201	Cover-Seal, Housing	225	Bushing-Stuffing Box Cover
202	Lock Ring Assy	230	Housing-Bearing
203	Seal-Interstage	237	Seal-Mechanical, Kit, Outboard end (See Detail A, Page 18)
204	Shaft-Impeller, Separable, Mech-Seal	238	Seal-Mechanical
205	Nut-Hex, 1/2-20	240	Gasket-Seal, Housing
207	Screw-Hex Hd, 1/2-20 x 2 in	241	Housing-Seal, Mech Seal (Includes 212)
209	Washer-Lock, 1/2 in	242	Ring-Retaining, Internal, 3-5/32 in Bore Dia
210	Key-Square, 5/16 x 1-3/8 in	243	Plug-Seal Housing
212	Pin-Dowel, 1/4 x 1/2 in	244	Shield-Bearing
213	Ring-Retaining	300	Ring-Wear
219	Ring-Retaining, External, 1-3/8 in Shaft Dia	301	Impeller, First Stage
222	O-Ring, 3 x 3-1/4 in	302	Impeller, Second Stage
223	Screw-Hex Hd, 1/4-20 x 1 in		

Note:
1. Entire Impeller shaft assembly as shown can be ordered as a replacement.

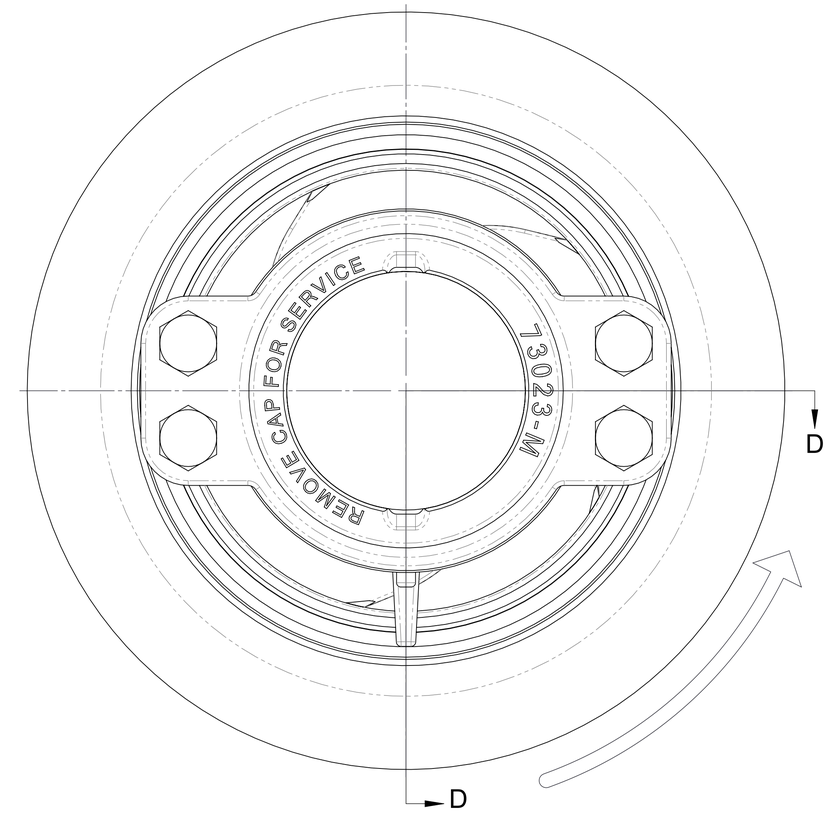

Looking into eye of first stage impeller

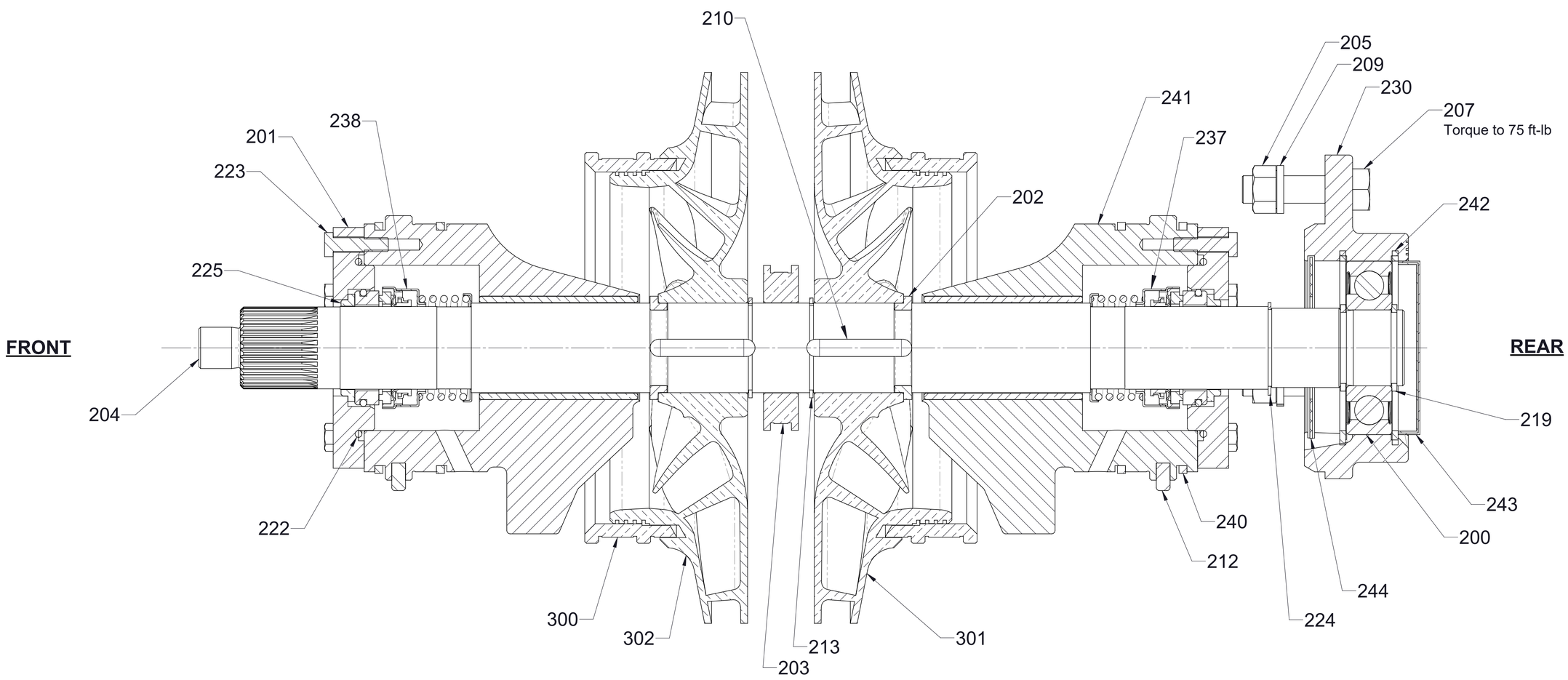

Section D-D

CM, CMU
Separable Shaft with Mechanical Seals
Front Drive
(CMU Shown)

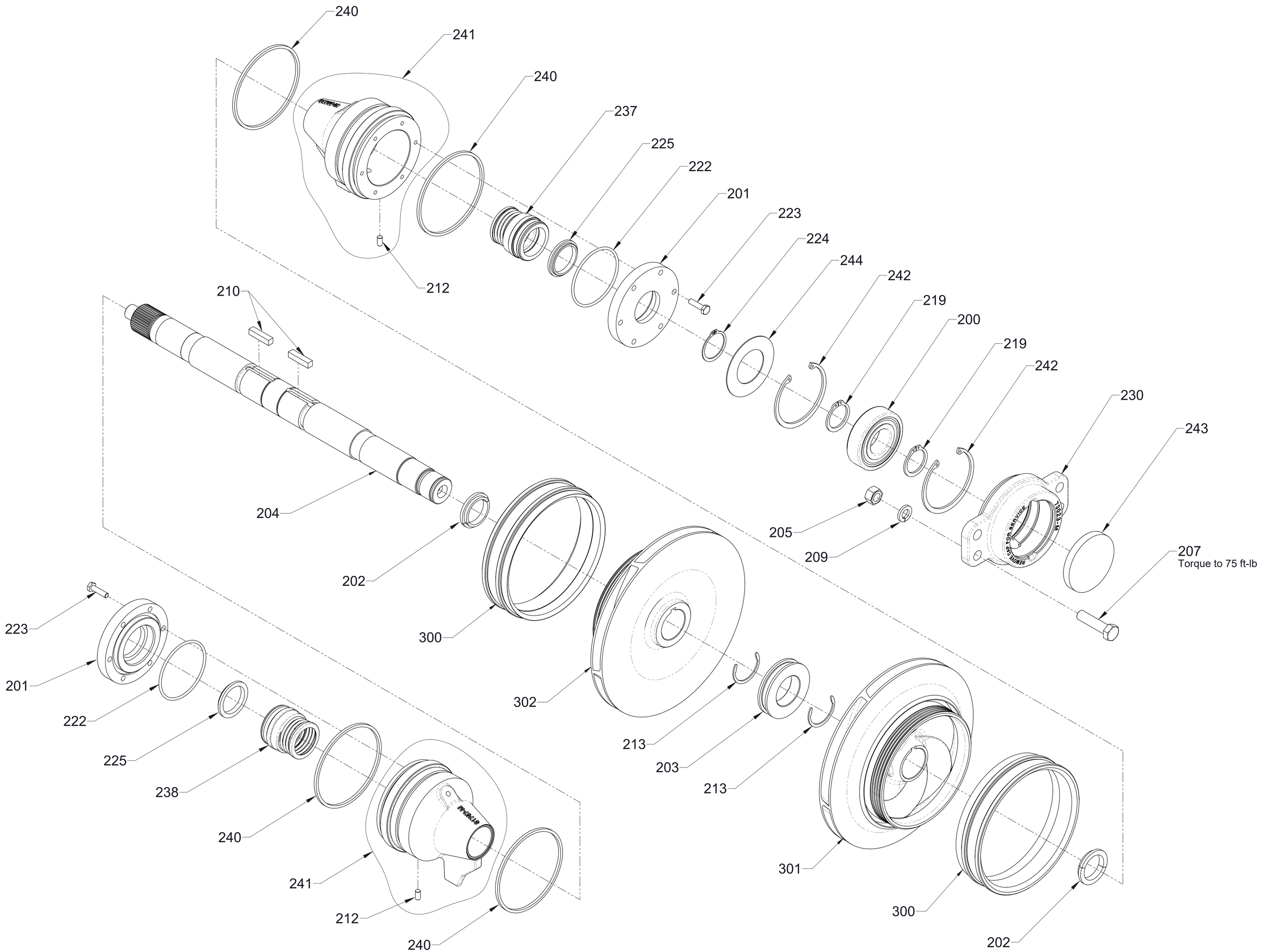

CM, CMU
Separable Shaft with Mechanical Seals
Front Drive
(CMU Shown)

Note:
1. See page 8 for section view and BOM table.

Ref No.	Description	Ref No.	Description
100	Bearing, Ball, Single Row, 35 x 80 x 21 mm	120	Washer-Lock, 3/8 in
101	Gland-Half	121	Screw-Hex Hd, 3/8-16 x 1 in
102	Lock Ring Assy	122	Seal-Oil, 1-23/32 X 2-3/4
103	Seal-Interstage	123	Nut-Self Locking, 1-20 UNEF-2B
104	Shaft-Impeller	124	Housing-Bearing
105	Nut-Hex, 1/2-20	125	Housing-Bearing
106	Yoke-End, 1410 Series, with U-bolts	126	V-Ring, Flinger
107	Screw-Hex Hd, 1/2-20 x 2 in	127	Spacer-Bearing
108	Screw-Hex Hd, 1/2-13 x 1-1/4 in	128	Housing-Oil Seal
109	Washer-Lock, 1/2 in	129	Gasket-Seal, Housing
110	Key-Square, 5/16 x 1-3/8 in	130	Ring-Lantern
111	Fitting-Lubrication	131	Stud-Coarse, 5/16-18 x 1-3/4 in
112	Pin-Dowel, 1/4 x 1/2 in	132	Nut-Unbalanced
113	Ring-Retaining	133	Washer-Flat, 5/16 in
114	Cap-Bearing Housing, Outboard End	134	Housing-Seal (Includes 112 and 131)
115	Gasket-Bearing Housing, DCM, DCMA	135	Packing Kit, Split Ring, BRG (Kit Includes 10 rings)
116	Plug-Pipe, Square Hd, 1/4 NPT	300	Ring-Wear
117	Seal-Oil, 1-5/8 x 2-3/4 in	301	Impeller, First Stage
118	Fitting-Lube, Relief	302	Impeller, Second Stage
119	Ring-Retaining, External, 1-3/8 in Shaft Dia		

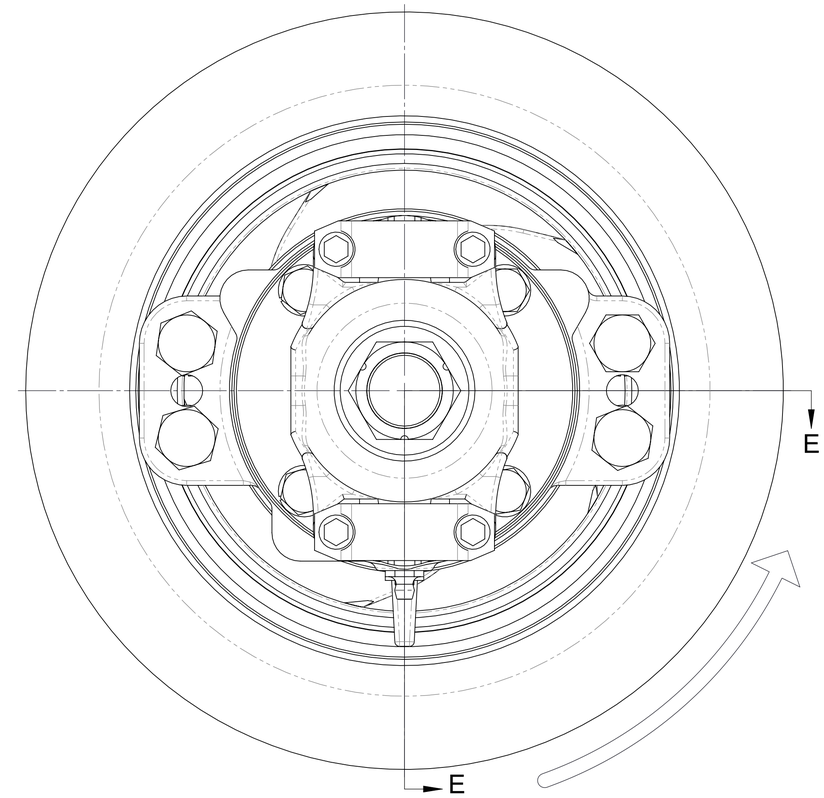

Looking into eye of first stage impeller

Note:
1. Entire Impeller shaft assembly as shown can be ordered as a replacement.

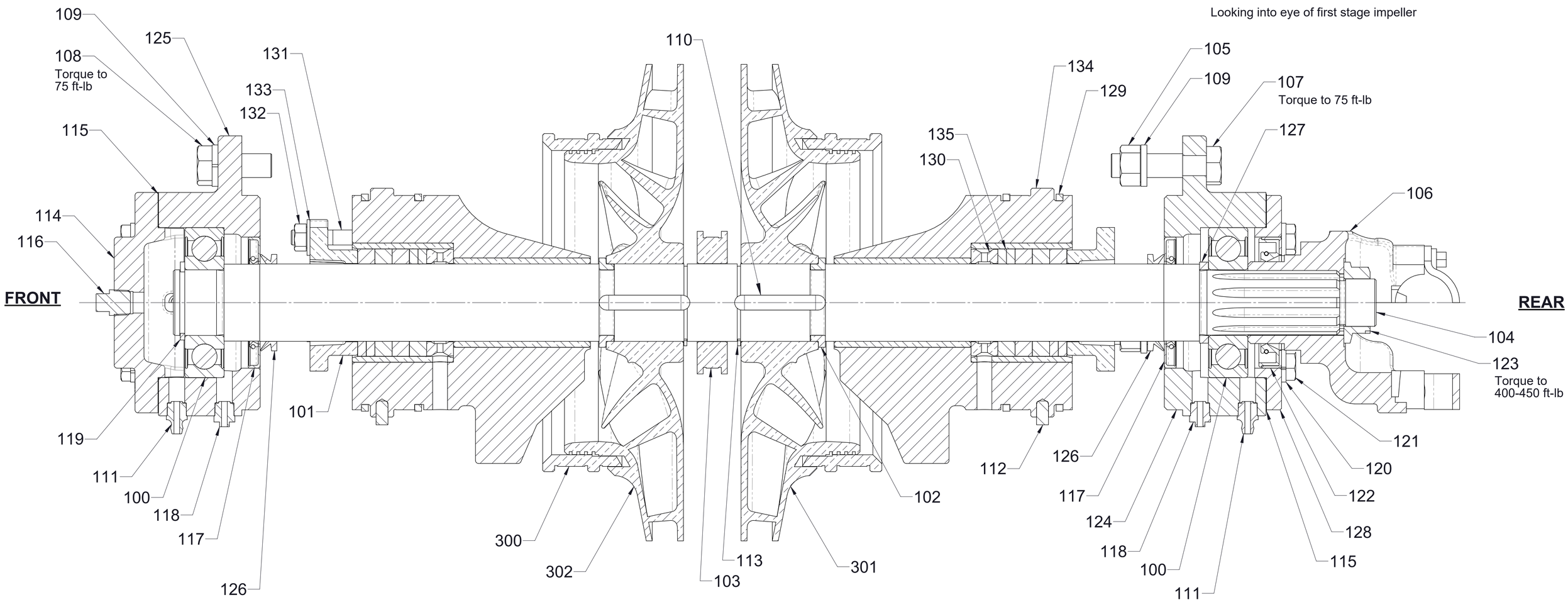

Section E-E

CMD, CMUD
One-Piece Shaft with Packing
Rear Drive
(CMU Shown)

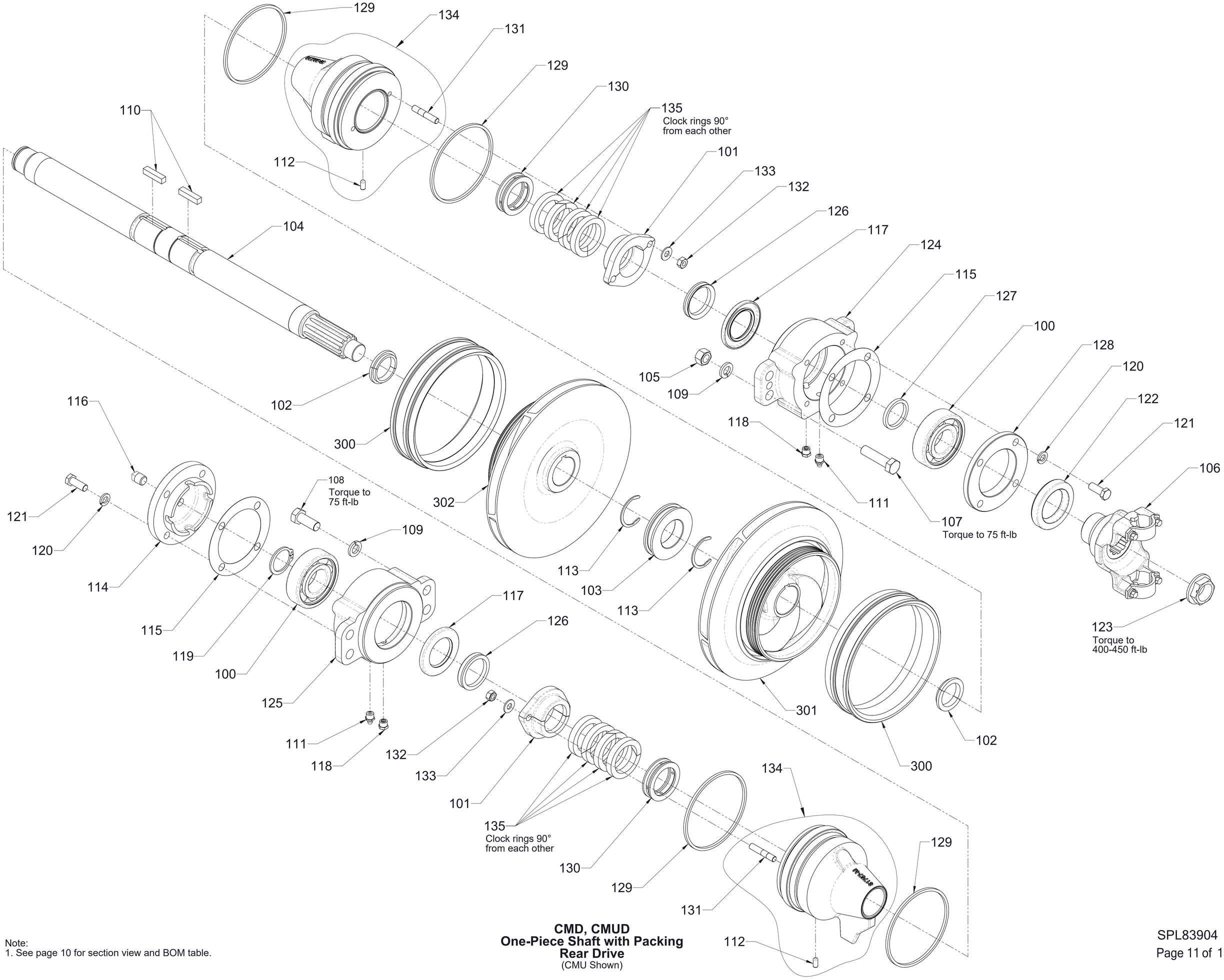

Note:
1. See page 10 for section view and BOM table.

CMD, CMUD
One-Piece Shaft with Packing
Rear Drive
(CMU Shown)

Ref No.	Description	Ref No.	Description
200	Bearing, Ball, Single Row, 35 x 80 x 21 mm	222	O-Ring, 3 x 3-1/4 in
201	Cover-Seal, Housing	223	Screw-Hex Hd, 1/4-20 x 1 in
202	Lock Ring Assy	224	Ring-Retaining, External, 1-1/2 in Shaft Dia
203	Seal-Interstage	225	Bushing-Stuffing Box Cover
204	Shaft-Impeller	226	Seal-Oil, 1-23/32 X 2-3/4
205	Nut-Hex, 1/2-20	227	Nut-Self Locking, 1-20 UNEF-2B
206	Yoke-End, 1410 Series, with U-bolts	228	Housing-Bearing
207	Screw-Hex Hd, 1/2-20 x 2 in	229	Housing-Bearing
208	Screw-Hex Hd, 1/2-13 x 1-1/4 in	231	V-Ring, Flinger
209	Washer-Lock, 1/2 in	232	Spacer-Bearing
210	Key-Square, 5/16 x 1-3/8 in	233	Housing-Oil Seal
211	Fitting-Lubrication	234	Seal-Oil, 1-7/16 x 2-3/4 in
212	Pin-Dowel, 1/4 x 1/2 in	235	Seal-Oil, 1-1/2 x 2-3/4 in
213	Ring-Retaining	236	Seal-Mechanical, Kit, Outboard end (See Detail C, Page 18)
214	Cap-Bearing Housing, Outboard End	236	Seal-Mechanical
215	Gasket-Bearing Housing, DCM, DCMA	240	Gasket-Seal, Housing
216	Plug-Pipe, Square Hd, 1/4 NPT	241	Housing-Seal, Mech Seal (Includes 212)
217	Fitting-Lube, Relief	300	Ring-Wear
219	Ring-Retaining, External, 1-3/8 in Shaft Dia	301	Impeller, First Stage
220	Washer-Lock, 3/8 in	302	Impeller, Second Stage
221	Screw-Hex Hd, 3/8-16 x 1 in		

Note:
1. Entire Impeller shaft assembly as shown can be ordered as a replacement.

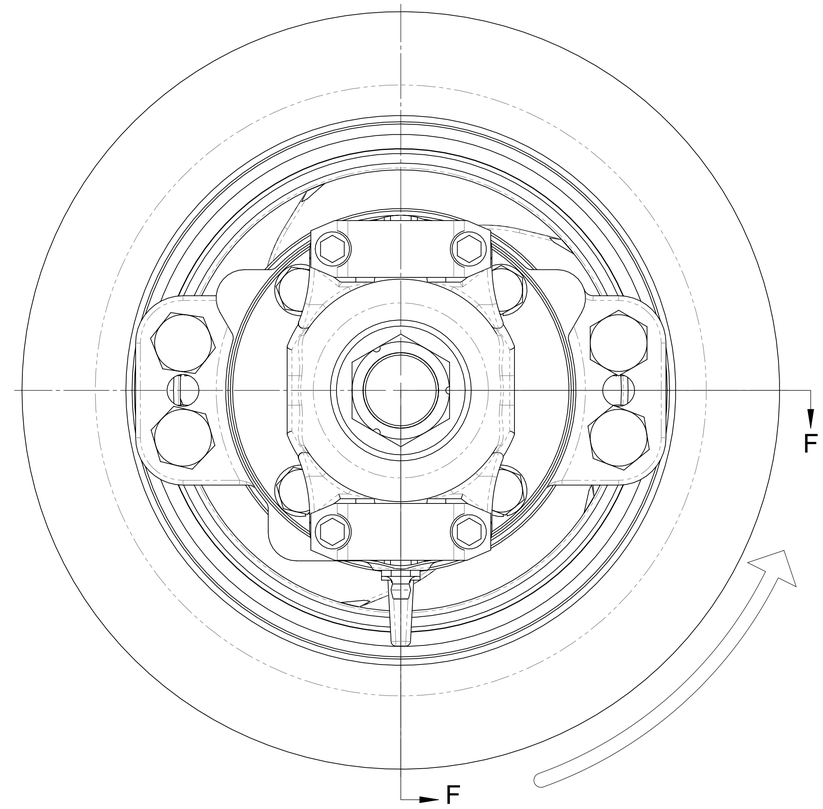

Looking into eye of first stage impeller

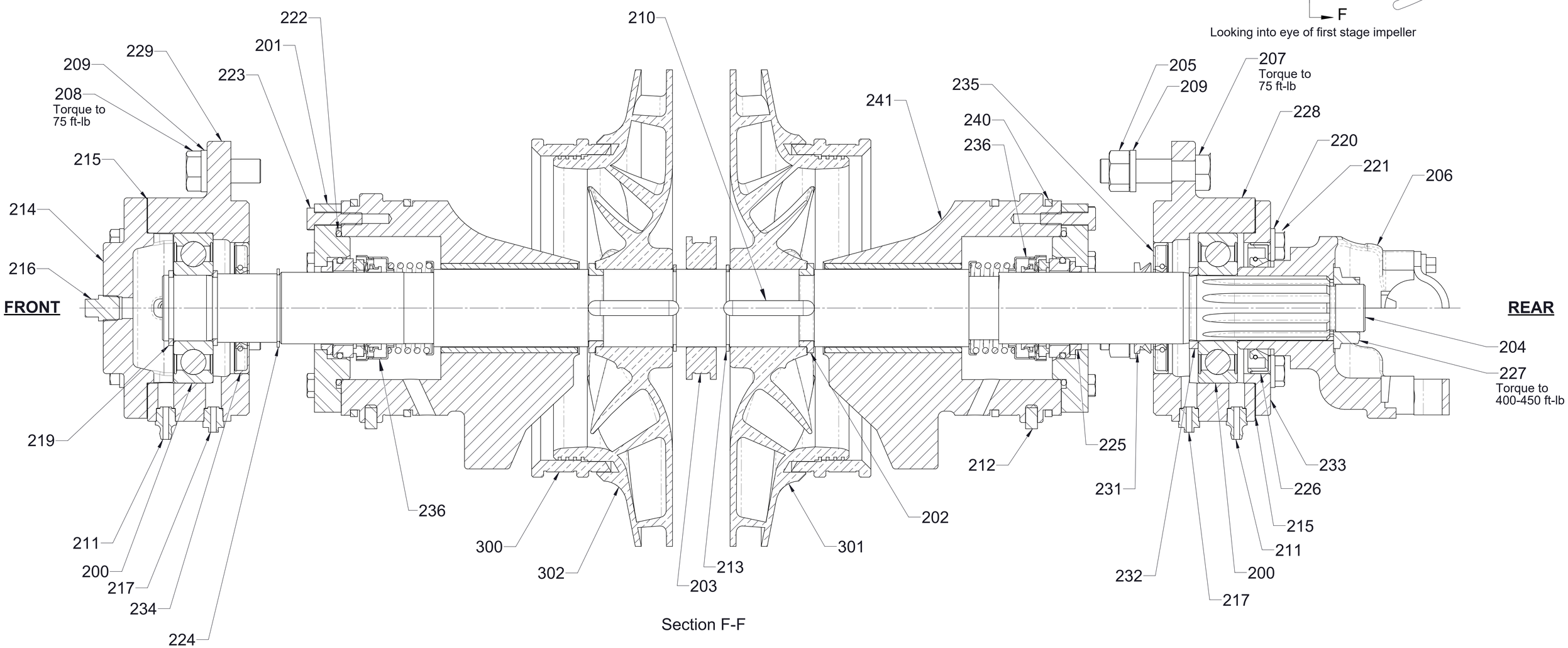

Section F-F

CMD, CMUD
One-Piece Shaft with Mechanical Seals
Rear Drive
(CMU Shown)

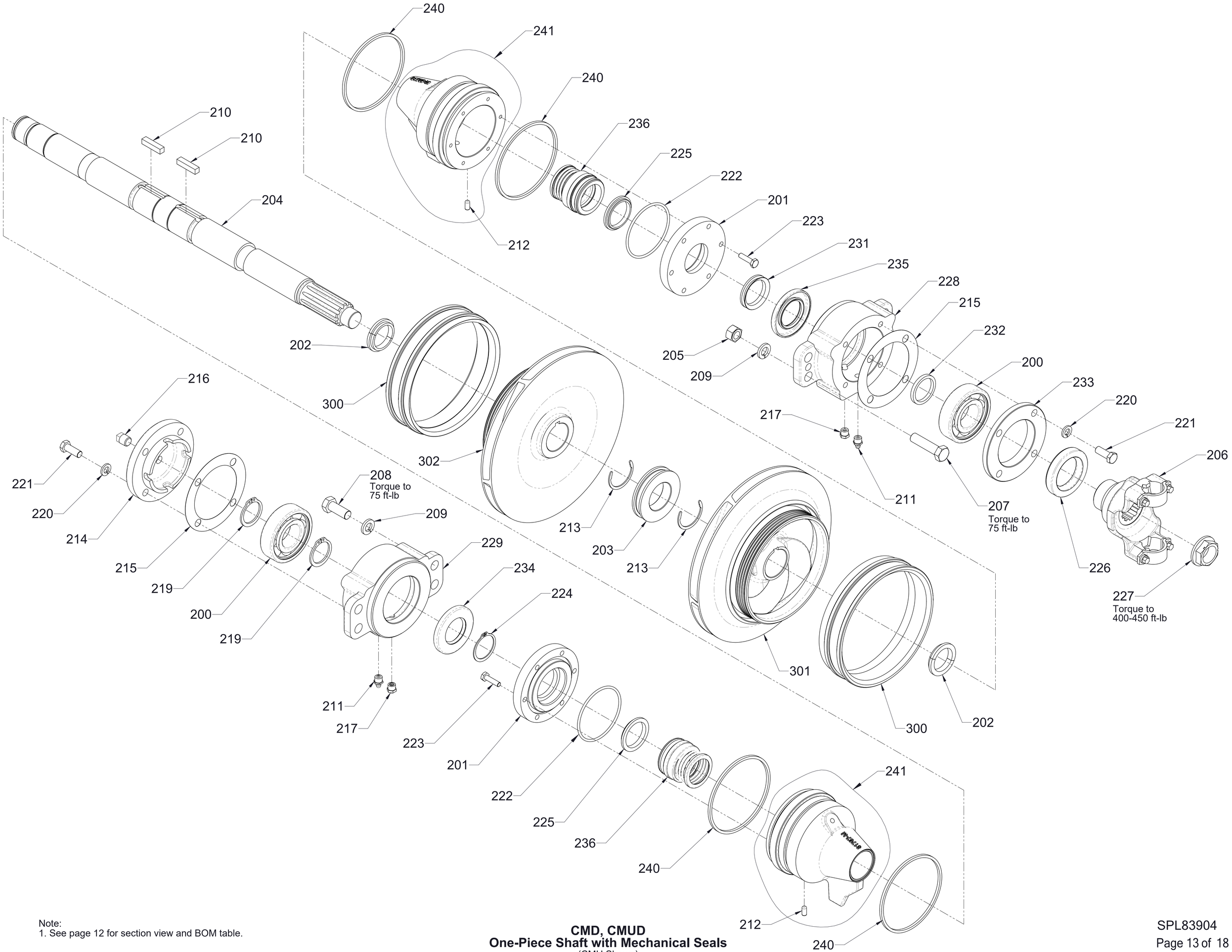

Note:
1. See page 12 for section view and BOM table.

CMD, CMUD
One-Piece Shaft with Mechanical Seals
(CMU Shown)

Ref No.	Description	Ref No.	Description
100	Bearing, Ball, Single Row, 35 x 80 x 21 mm	120	Washer-Lock, 3/8 in
101	Gland-Half	121	Screw-Hex Hd, 3/8-16 x 1 in
102	Lock Ring Assy	122	Seal-Oil, 1-23/32 X 2-3/4
103	Seal-Interstage	123	Nut-Self Locking, 1-20 UNEF-2B
104	Shaft-Impeller	124	Housing-Bearing
105	Nut-Hex, 1/2-20	125	Housing-Bearing
106	Yoke-End, 1410 Series, with U-bolts	126	V-Ring, Flinger
107	Screw-Hex Hd, 1/2-20 x 2 in	127	Spacer-Bearing
108	Screw-Hex Hd, 1/2-13 x 1-1/4 in	128	Housing-Oil Seal
109	Washer-Lock, 1/2 in	129	Gasket-Seal, Housing
110	Key-Square, 5/16 x 1-3/8 in	130	Ring-Lantern
111	Fitting-Lubrication	131	Stud-Coarse, 5/16-18 x 1-3/4 in
112	Pin-Dowel, 1/4 x 1/2 in	132	Nut-Unbalanced
113	Ring-Retaining	133	Washer-Flat, 5/16 in
114	Cap-Bearing Housing, Outboard End	134	Housing-Seal (Includes 112 and 131)
115	Gasket-Bearing Housing, DCM, DCMA	135	Packing Kit, Split Ring, BRG (Kit Includes 10 rings)
116	Plug-Pipe, Square Hd, 1/4 NPT	300	Ring-Wear
117	Seal-Oil, 1-5/8 x 2-3/4 in	301	Impeller, First Stage
118	Fitting-Lube, Relief	302	Impeller, Second Stage
119	Ring-Retaining, External, 1-3/8 in Shaft Dia		

Note:
1. Entire Impeller shaft assembly as shown can be ordered as a replacement.

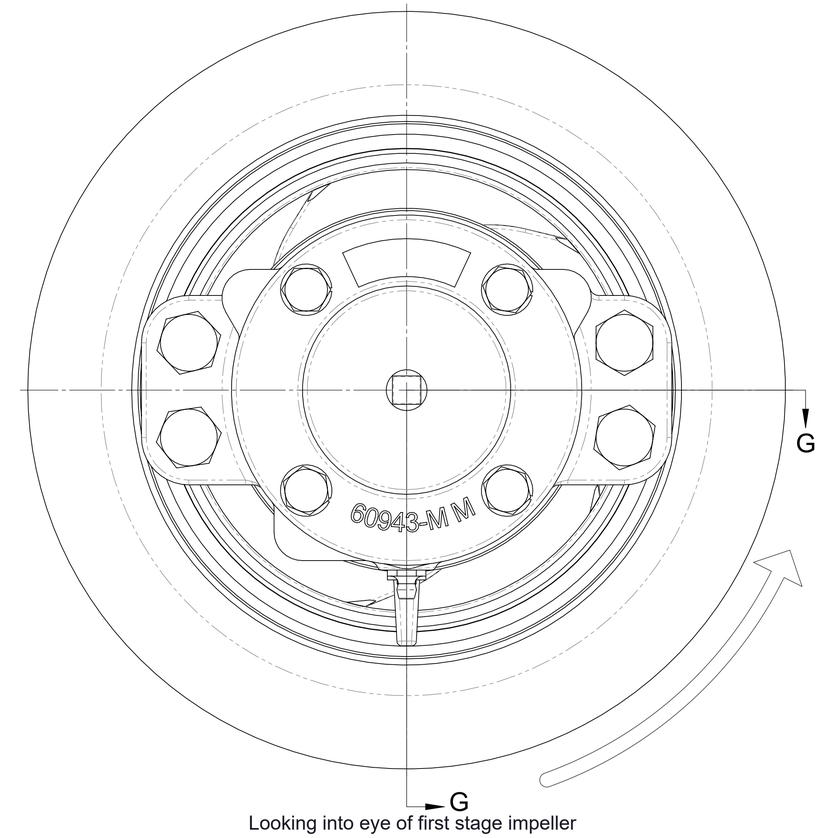

Looking into eye of first stage impeller

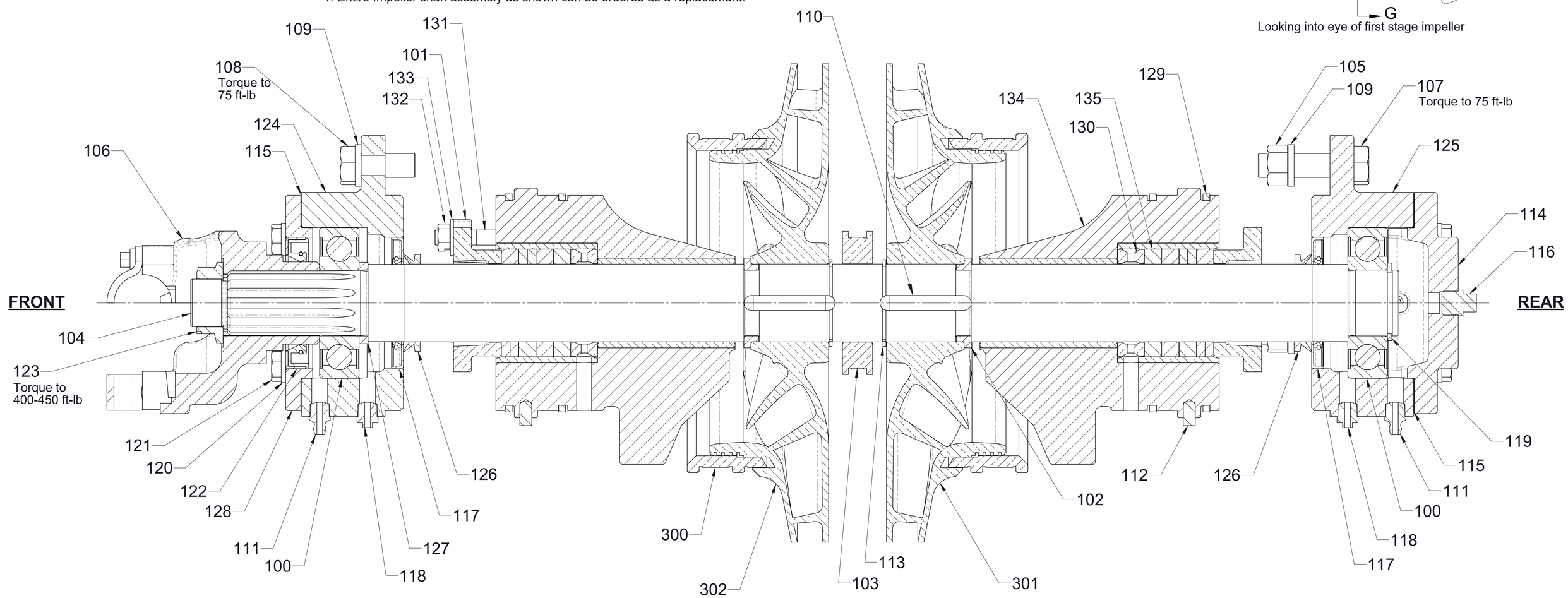

Section G-G

CMD, CMUD
One-Piece Shaft with Packing
Front Drive
(CMU Shown)

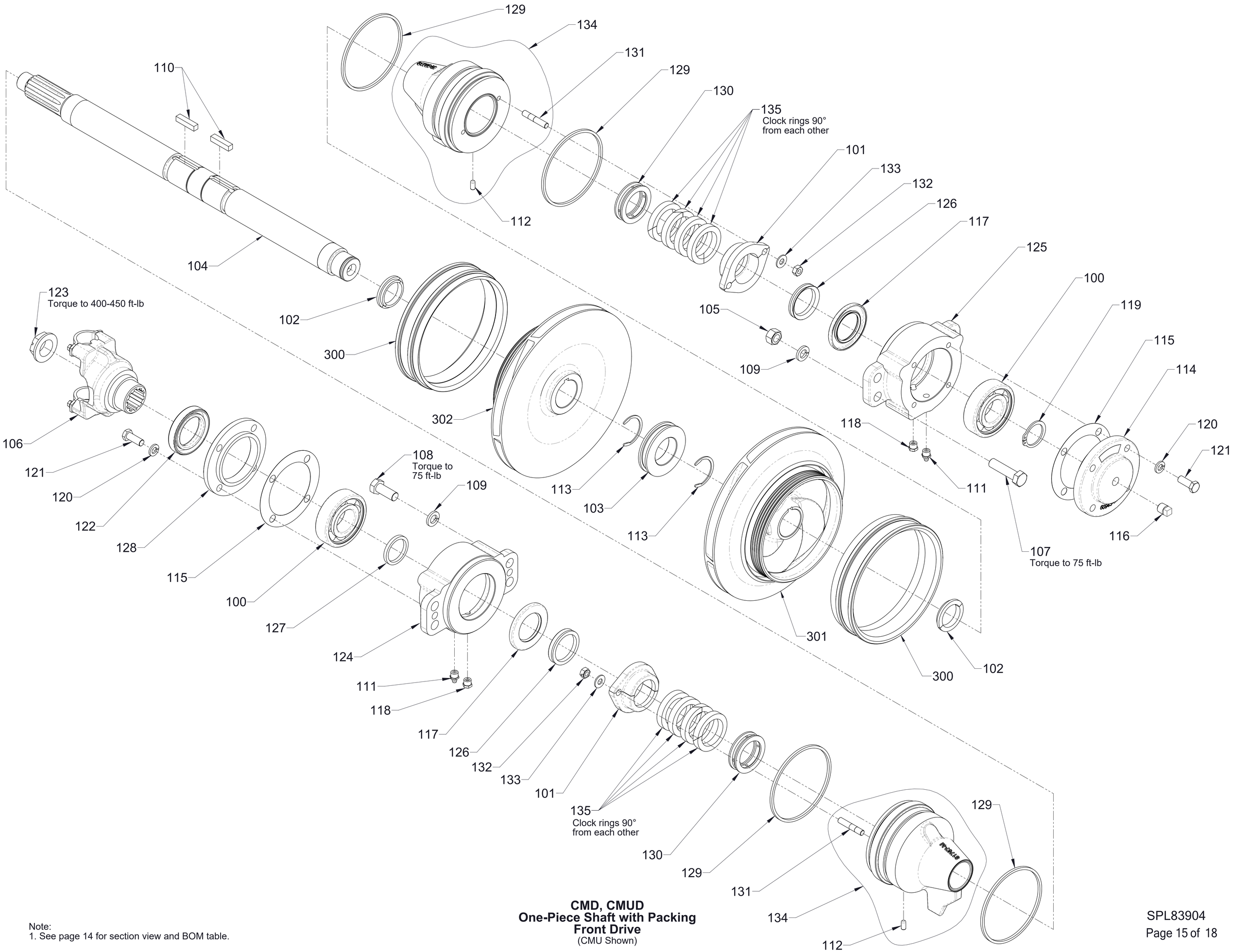

CMD, CMUD
One-Piece Shaft with Packing
Front Drive
(CMU Shown)

Note:
1. See page 14 for section view and BOM table.

Ref No.	Description	Ref No.	Description
200	Bearing, Ball, Single Row, 35 x 80 x 21 mm	222	O-Ring, 3 x 3-1/4 in
201	Cover-Seal, Housing	223	Screw-Hex Hd, 1/4-20 x 1 in
202	Lock Ring Assy	224	Ring-Retaining, External, 1-1/2 in Shaft Dia
203	Seal-Interstage	225	Bushing-Stuffing Box Cover
204	Shaft-Impeller	226	Seal-Oil, 1-23/32 X 2-3/4
205	Nut-Hex, 1/2-20	227	Nut-Self Locking, 1-20 UNEF-2B
206	Yoke-End, 1410 Series, with U-bolts	228	Housing-Bearing
207	Screw-Hex Hd, 1/2-20 x 2 in	229	Housing-Bearing
208	Screw-Hex Hd, 1/2-13 x 1-1/4 in	231	V-Ring, Flinger
209	Washer-Lock, 1/2 in	232	Spacer-Bearing
210	Key-Square, 5/16 x 1-3/8 in	233	Housing-Oil Seal
211	Fitting-Lubrication	234	Seal-Oil, 1-7/16 x 2-3/4 in
212	Pin-Dowel, 1/4 x 1/2 in	235	Seal-Oil, 1-1/2 x 2-3/4 in
213	Ring-Retaining	236	Seal-Mechanical
214	Cap-Bearing Housing, Outboard End	239	Seal-Mechanical, Kit, Drive end (See Detail D, Page 18)
215	Gasket-Bearing Housing, DCM, DCMA	240	Gasket-Seal, Housing
216	Plug-Pipe, Square Hd, 1/4 NPT	241	Housing-Seal, Mech Seal (Includes 212)
217	Fitting-Lube, Relief	300	Ring-Wear
219	Ring-Retaining, External, 1-3/8 in Shaft Dia	301	Impeller, First Stage
220	Washer-Lock, 3/8 in	302	Impeller, Second Stage
221	Screw-Hex Hd, 3/8-16 x 1 in		

Note:
1. Entire Impeller shaft assembly as shown can be ordered as a replacement.

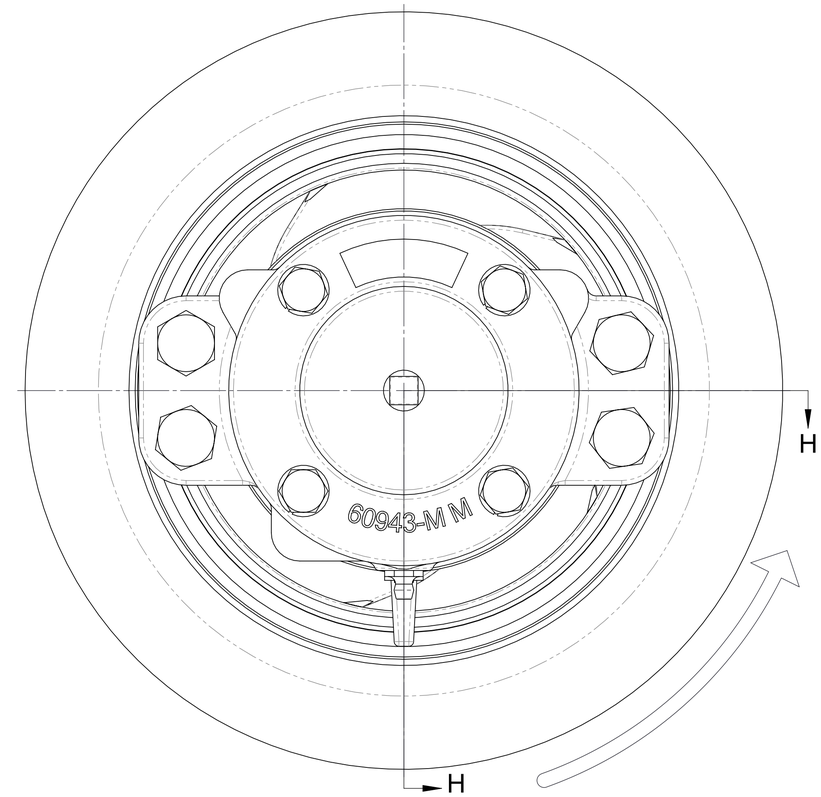

Looking into eye of first stage impeller

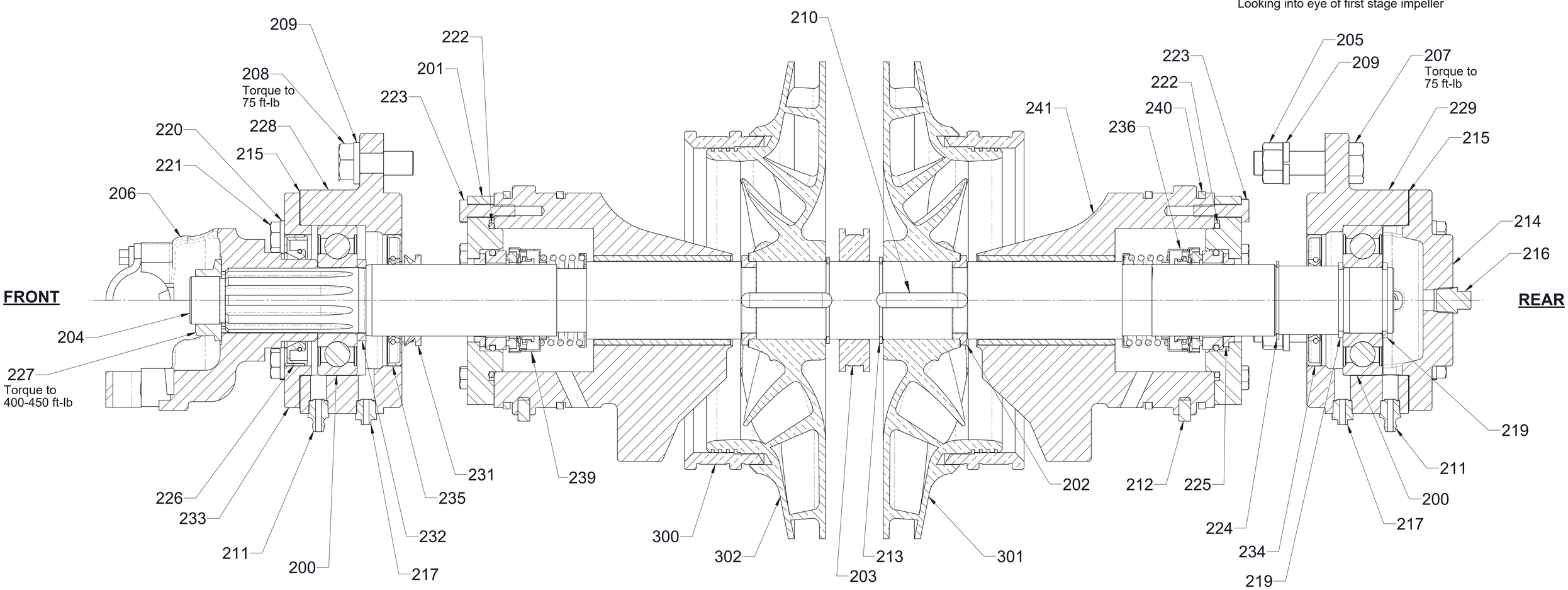

Section H-H

CMD, CMUD
One-Piece Shaft with Mechanical Seals
Front Drive
(CMU Shown)

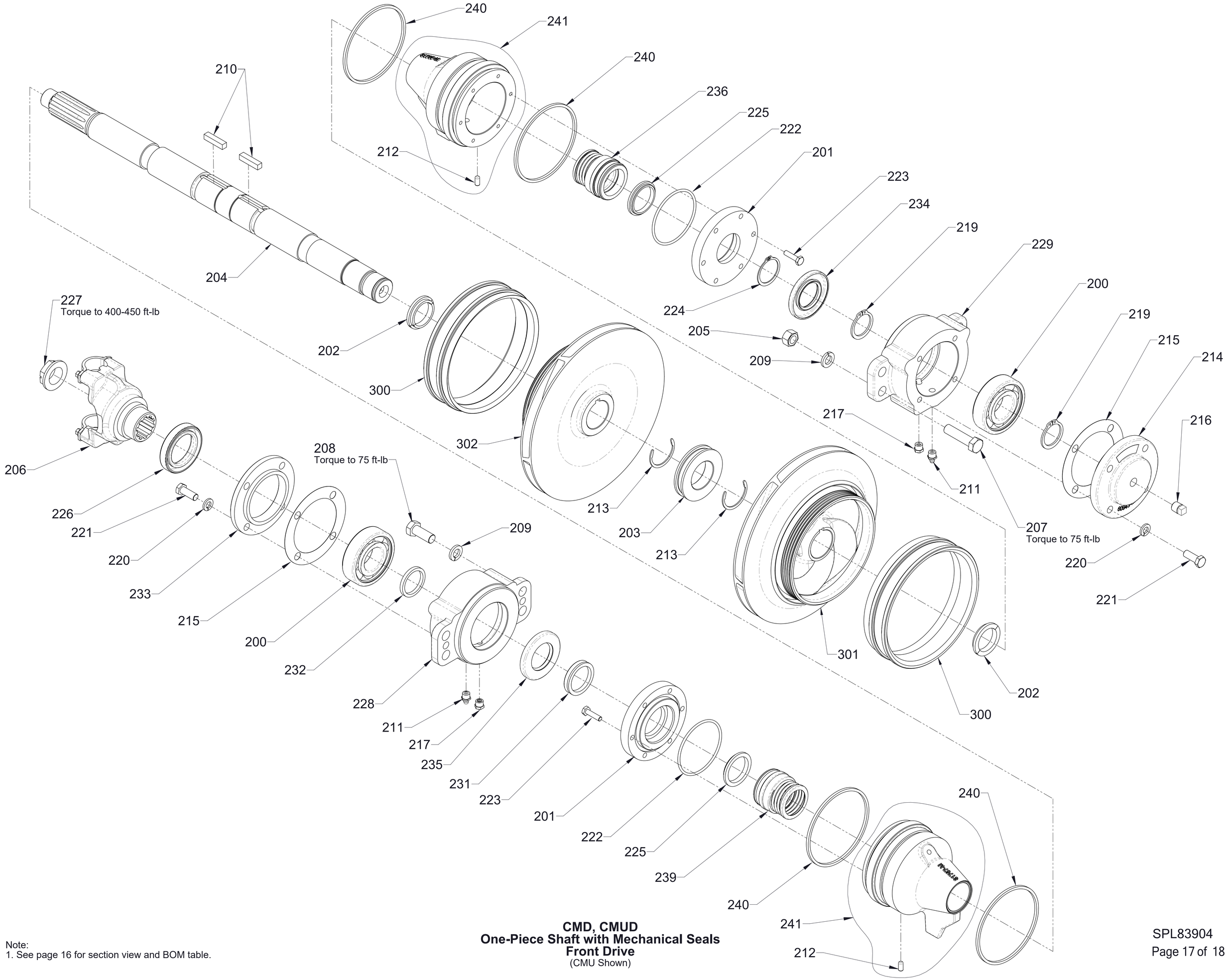

Note:
1. See page 16 for section view and BOM table.

CMD, CMUD
One-Piece Shaft with Mechanical Seals
Front Drive
(CMU Shown)

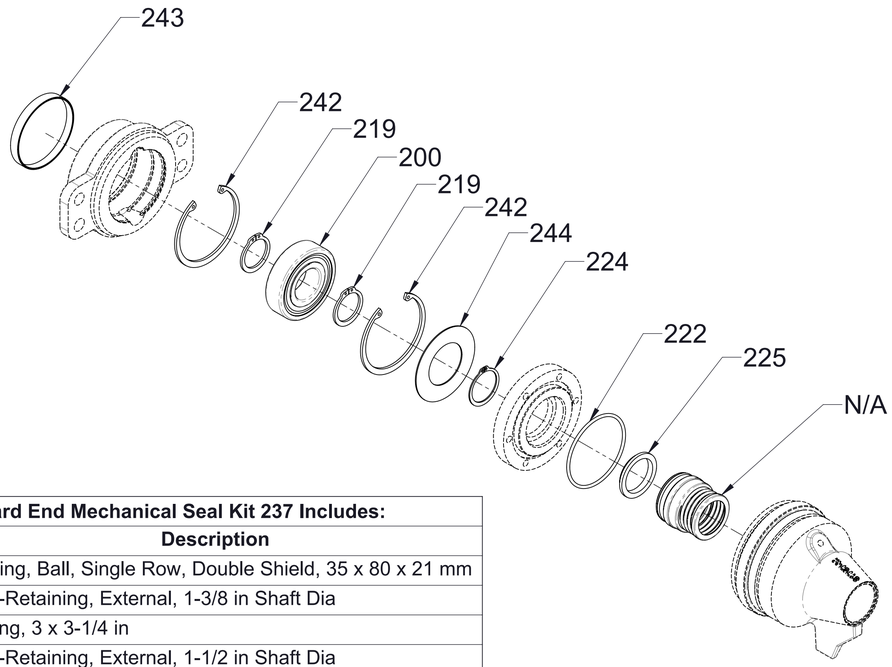

Outboard End Mechanical Seal Kit 237 Includes:	
Ref No.	**Description**
200	Bearing, Ball, Single Row, Double Shield, 35 x 80 x 21 mm
219	Ring-Retaining, External, 1-3/8 in Shaft Dia
222	O-Ring, 3 x 3-1/4 in
224	Ring-Retaining, External, 1-1/2 in Shaft Dia
225	Bushing-Stuffing Box Cover
242	Ring-Retaining, Internal, 3-5/32 in Bore Dia
243	Plug-Seal Housing
244	Shield-Bearing
N/A	Seal-Mechanical

Detail A
Outboard End (CM/CMU)

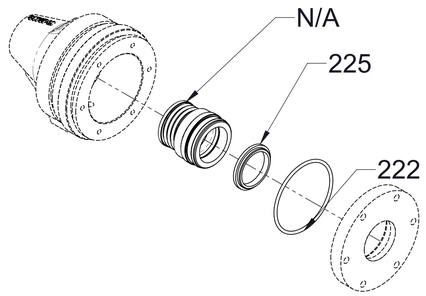

Drive End Mechanical Seal Kit 238 Includes:	
Ref No.	**Description**
222	O-Ring, 3 x 3-1/4 in
225	Bushing-Stuffing Box Cover
N/A	Seal-Mechanical

Detail B
Drive End (CM/CMU)

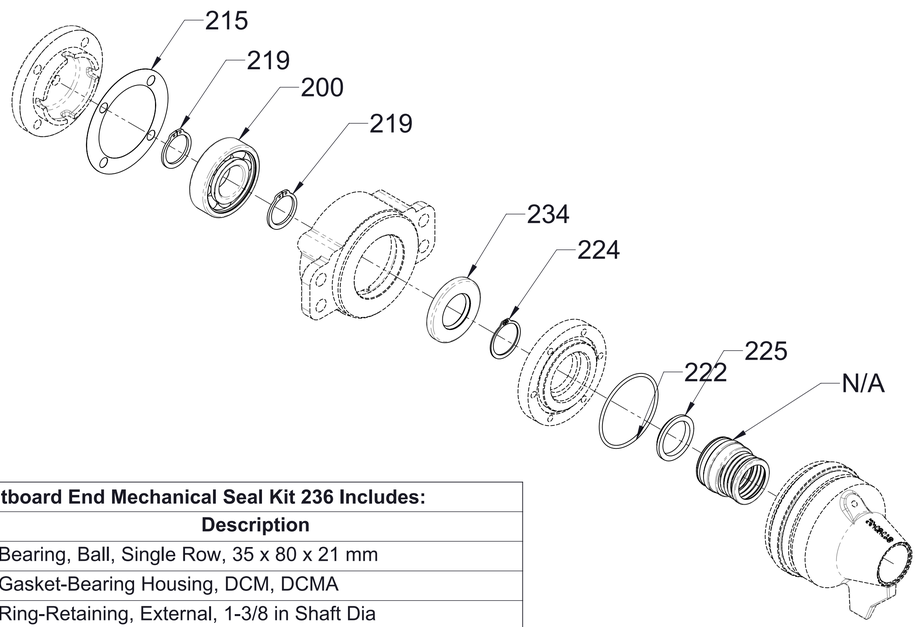

Outboard End Mechanical Seal Kit 236 Includes:	
Ref No.	**Description**
200	Bearing, Ball, Single Row, 35 x 80 x 21 mm
215	Gasket-Bearing Housing, DCM, DCMA
219	Ring-Retaining, External, 1-3/8 in Shaft Dia
222	O-Ring, 3 x 3-1/4 in
224	Ring-Retaining, External, 1-1/2 in Shaft Dia
225	Bushing-Stuffing Box Cover
234	Seal-Oil, 1-7/16 x 2-3/4 in
N/A	Seal-Mechanical

Detail C
Outboard End (CMD/CMUD)

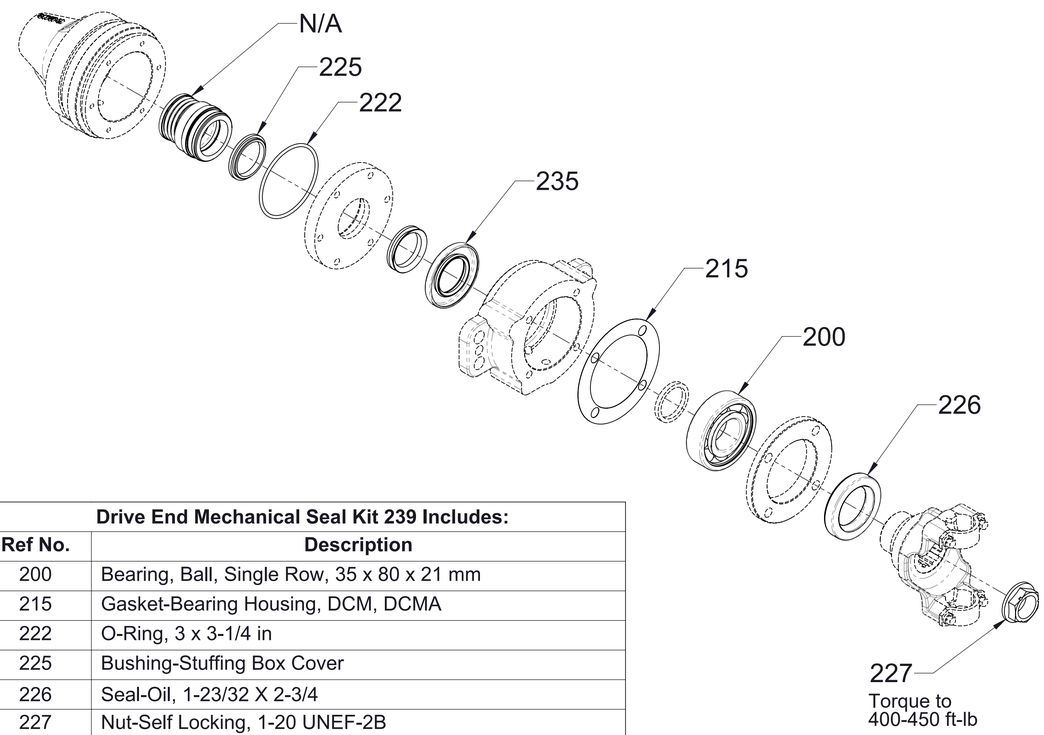

Drive End Mechanical Seal Kit 239 Includes:	
Ref No.	**Description**
200	Bearing, Ball, Single Row, 35 x 80 x 21 mm
215	Gasket-Bearing Housing, DCM, DCMA
222	O-Ring, 3 x 3-1/4 in
225	Bushing-Stuffing Box Cover
226	Seal-Oil, 1-23/32 X 2-3/4
227	Nut-Self Locking, 1-20 UNEF-2B
235	Seal-Oil, 1-1/2 x 2-3/4 in
N/A	Seal-Mechanical

Detail D
Drive End (CMD/CMUD)

Mechanical Seal Kits