WATEROUS

Document Number	Issue Date	Rev. Date
SPL83506	02/06/15	06/03/20

Tank to Pump Valve with Electric Rotary Actuator

Service Parts List

Components	See Page
Tank to Pump Valve	2
Cables and Panel Components	3
Available Repair Subassemblies	4

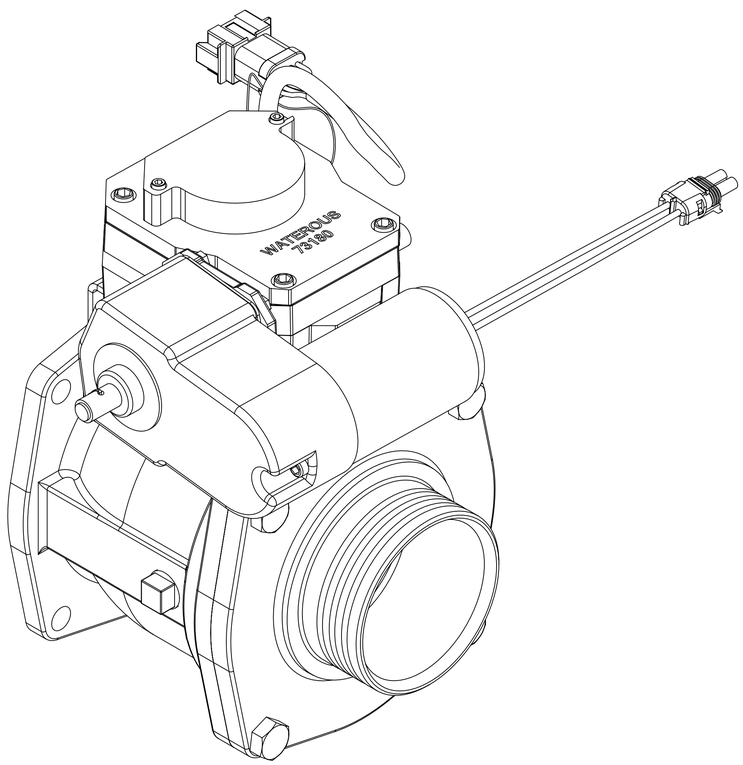

Ref No.	Description	Ref No.	Description
4	Pin-Spring, 1/4 x 1-1/8 in	41	O-Ring, 6 x 6-1/4 in
31	Screw-Hex Hd, 3/8-16 x 5/8 in	42	Washer-Plain, 1/4 in
32	Washer-Lock, 3/8 in	43	Screw-Machine, Pan Hd, 1/4-20 x 1/2 in
33	O-Ring, 2-5/16 x 2-1/2 in	44	O-Ring, 5 x 5-1/4 in
34	BUSHING-UPPER STEM (TSBV)	45	Screw-Hex Hd, 1/2-13 x 1-1/4 in
35	O-Ring, 3/4 x 15/16 in	46	RETAINER-SEAL (TSBV)
36	Ball-Tank, Intake Valve	47	Seal-Valve, Ball
37	O-Ring, 1-1/8 x 1-5/16 in	50	Nipple-Hose
38	BODY-VALVE (3-1/2) (TSBV)	51	O-Ring, 3-3/4 X 4 in
39	Plug-Pivot, Ball Valve	52	Spring-Wave
40	Plug-Pipe, Square Hd, 1/2 NPT	55	O-Ring, 6-3/4 x 7 in
		56	Discharge Valve Repair Kit

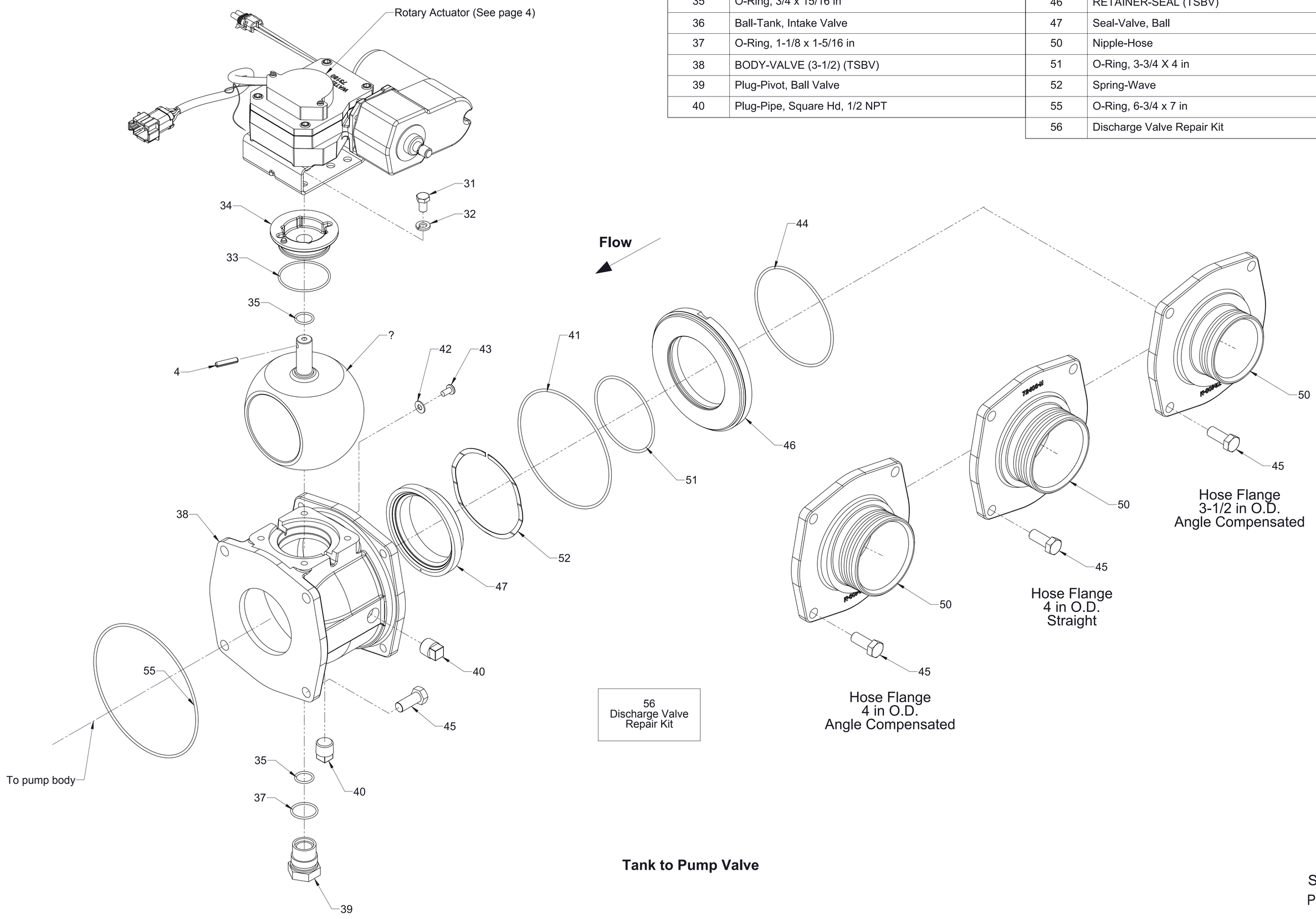

Tank to Pump Valve

Ref No.	Description
24	Nut-Adapter
26	Pin-Spirol, 1/8 X 3/4 in, Heavy, SS
56	Discharge Valve Repair Kit
69	LED Panel Wiring Assembly
70	Cable-Extension, Encoder
71	Wire-Motor Extension
83	Control Panel Mounting Hardware (Includes (4) Socked HD Screws, #6-32 x 3/4 in and (4) Nylok Nuts, #6-32)

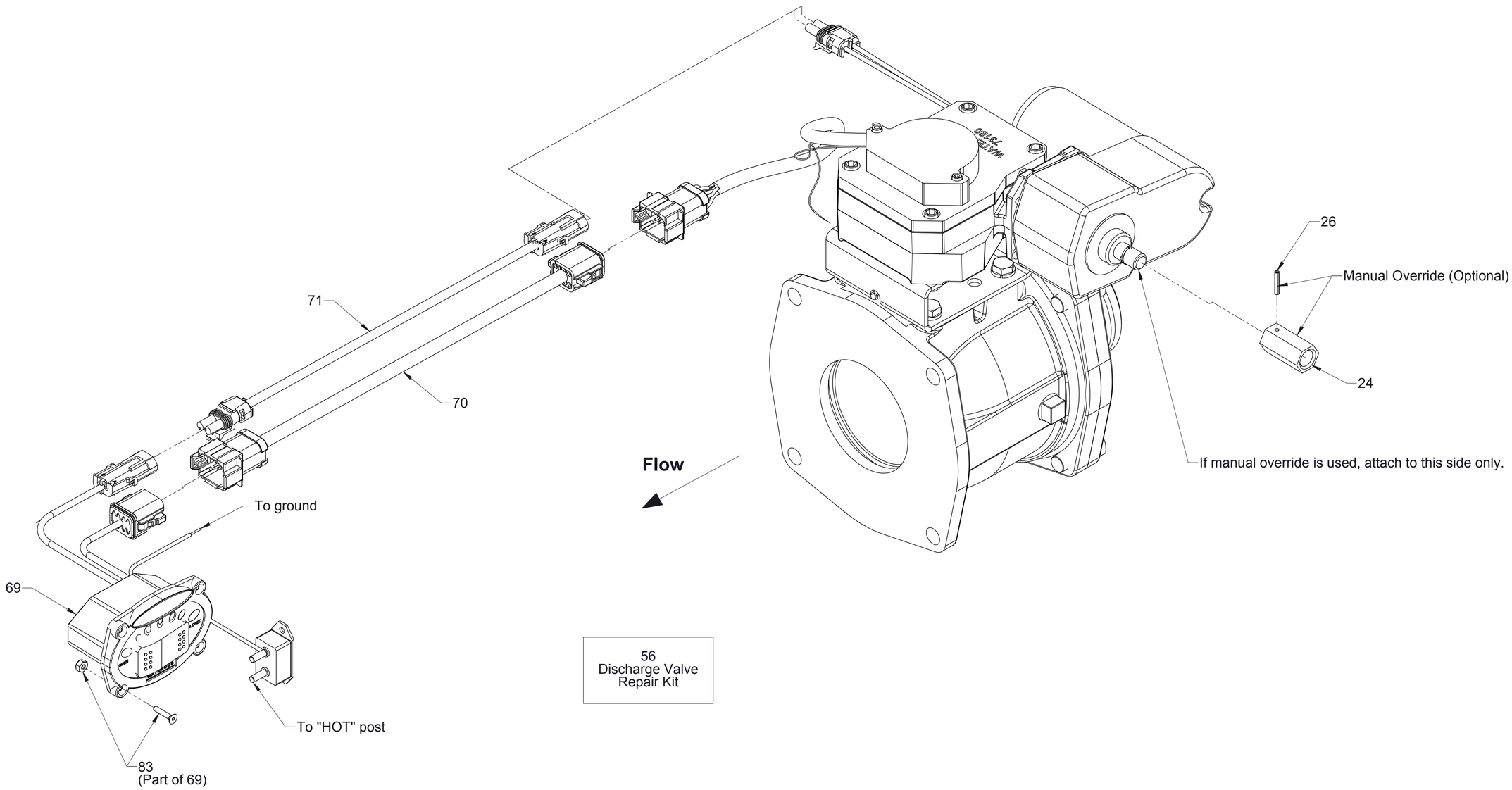

Cables and Panel Components

Ref No.	Description
53	Rotary Encoder Replacement Kit
57	Motor Replacement Kit
84	Actuator Subassembly
85	Valve and Actuator Subassembly

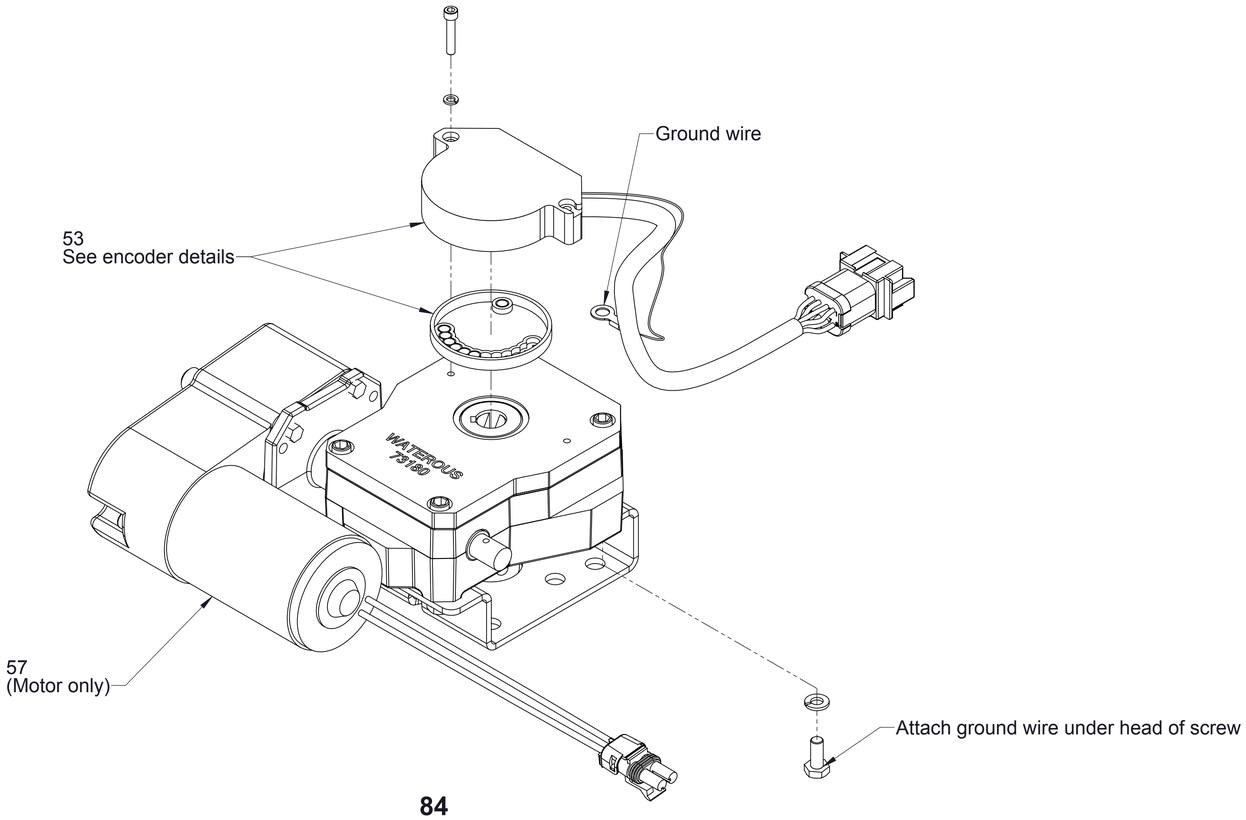

84

Actuator Subassembly

57
Motor Replacement Kit

53
Rotary Encoder Replacement Kit

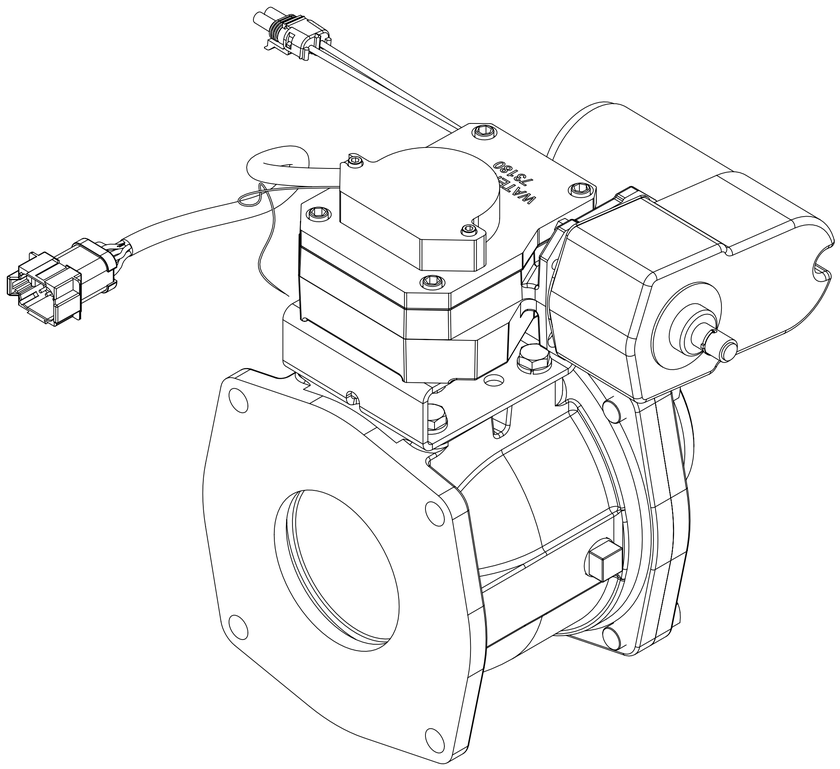

85

Valve and Actuator Subassembly

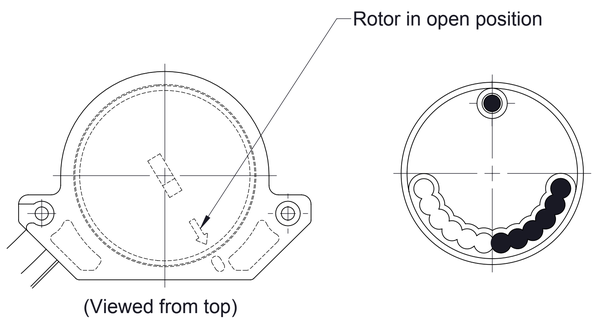

Rotor Position **Rotor Magnet Positions**

Encoder Details

Available Repair Subassemblies