WATEROUS

Document Number	Issue Date	Rev. Date
SPL83809	02/12/20	08/17/20

Air Compressor Service Parts List

Eclipse GEN 2.0 CAFS Model 150-ECL
Pump Models HL200K, HL300K, HL400K

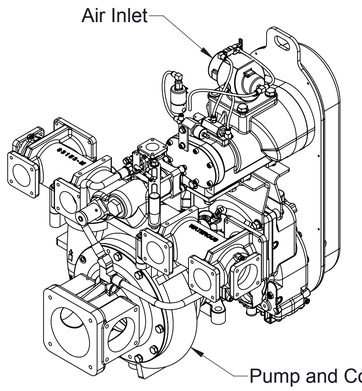

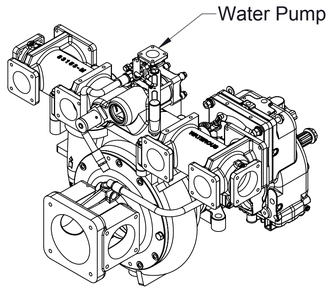

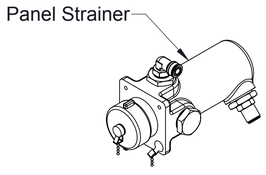

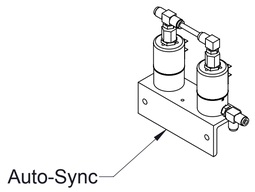

Hoses and Fittings Kit (Optional)

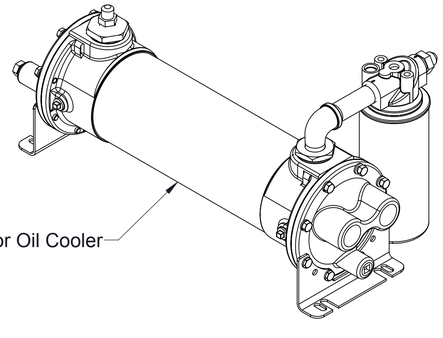

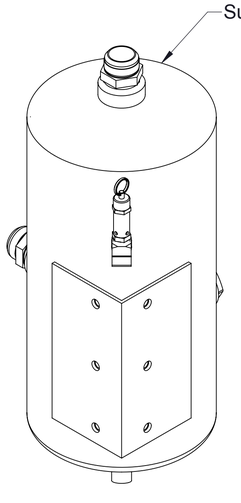

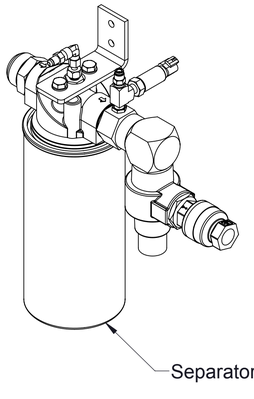

Index:

Component		See Page: Non High-Rise	See Page: High Rise
Compressor	Belt Drive	2	2
	Mounting on Pump	3	3
	Air End	4	5
	Air Inlet	6	6
	Auto-Sync (High-Rise only)	--	7
Separator Filter		8	8
Sump		9	9
Oil Cooler, Filter and Strainer		10	10
Schematic	Air Circuit	11	12
	Hydraulic	13	13
	Electrical	See Foam Generator Service Parts List	
Water Pump		See Pump and Transmission Service Parts List	
Hose and Fittings Kit		Optional from Waterous, see Service Parts List SPL83368	

Ref No.	Description
1	Cover-Belt
2	Decal-Waterous
4	Washer-Flat, 6 mm
5	Screw-Soc Hd, M6-1 x 16 mm
16	Belt, 130 Tooth, 36mm
17	Sprocket-Drive, 63 Groove
18	Bushing-Taper Lock, 1-1/4 x 2517
19	Sprocket-Driven, 30 Groove
20	Washer-Large Diameter, CF75D8 Compressor
21	Washer-Lock, 16 mm
22	Screw-Hex Hd, M16-2 x 40 mm
23	Idler-Sprocket, 36 mm
24	Washer-Plain, 3/4 in
26	Spacer-Idler Belt Tensioner
28	Key-Square, 1/4 x 1-1/2 in
70	Plate-Warning
100	Plate-Serial

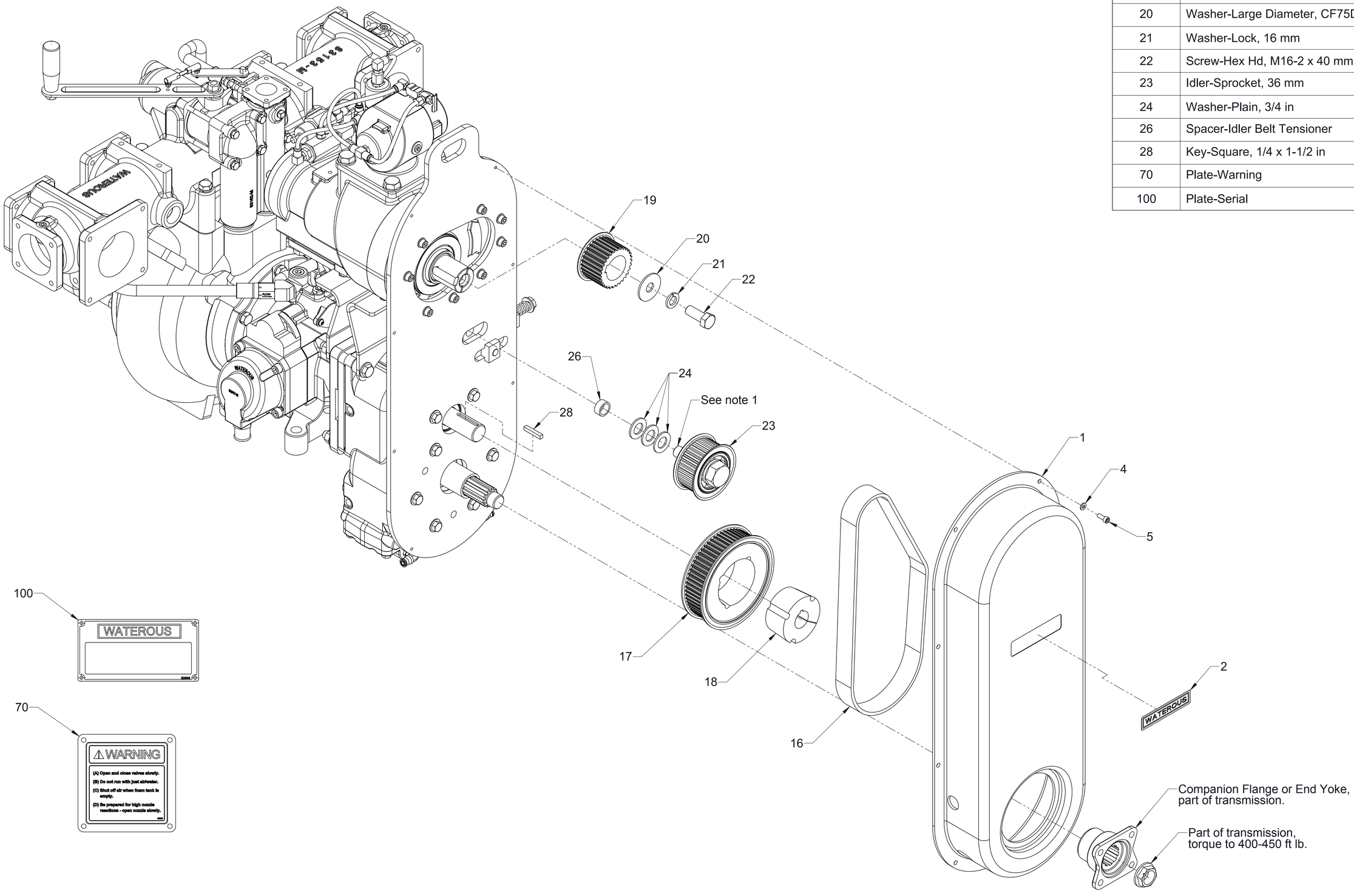

Note:
1. Clean threads and prime. Apply Loctite #242/243 (blue) to threads. Torque to 200-220 ft lb.

Compressor-Belt Drive

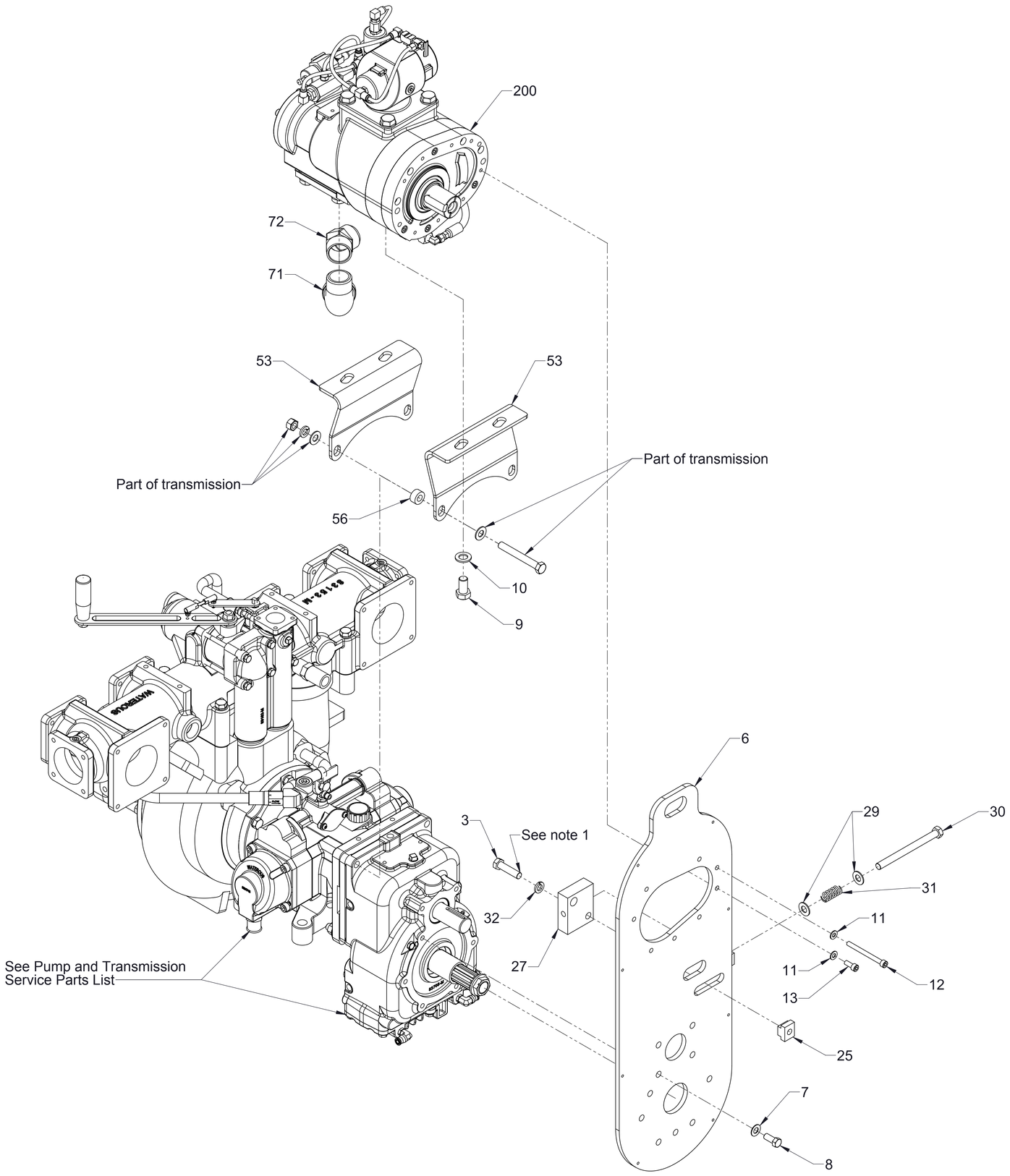

Ref No.	Description
3	Screw-Hex Hd, 1/2-20 x 2 in
6	Plate-Compressor, Vertical
7	Washer-Plain, 7/16 in
8	Screw-Hex Hd, 7/16-14 x 1 in
9	Screw-Hex Hd, M16-2 x 30 mm
10	Washer-Flat, 16 mm
11	Washer-Flat, 8 mm
12	Screw-Soc Hd, M8-1.25 x 90 mm
13	Screw-Soc Hd, M8-1.25 x 20 mm
25	T-Slot Nut, 1/2-20
27	Block-Belt Tensioner
29	Washer-Plain, 1/2 in
30	Screw-Hex Hd, 1/2-13 x 6 in
31	Spring-Tensioner, Belt
32	Washer-Lock, 1/2 in
53	Bracket-Support, Compressor
56	Spacer, 1/2 x 1 x 1/2 in
71	Elbow-Street, 90°, 1-1/2 NPT
72	Elbow-Adapter, 24 MJIC x 1-1/2 NPT, 45°
200	Compressor Subassembly

Note:
1. Clean threads and prime. Apply Loctite #242/243 (blue) to threads. Torque to 200-220 ft lb.

Compressor-Mounting on Pump

Ref No.	Description
63	Black Air Brake Tube, 1/4 in (cut to length)
200	Compressor Subassembly
201	Inlet-Air, 90°
202	Bushing-Reducing, 1/4 MNPT x 1/8 FNPT
203	Tee-Branch, 1/8 MNPT x 1/8 FNPT x 1/8 FNPT
204	Valve-Trim, 1/8 MNPT x 1/4 AB
205	Elbow-90°, 1/8 MNPT x 1/4 AB
206	Elbow-90°, 1/4 MNPT x 1/4 AB
207	Tee-Branch, 1/4 MNPT x 1/4 AB x 1/4 AB
214	Adapter-Straight, 4 MJIC X 12 MM
217	Hose-Assembly, Oil Injection (Straight x 90°)
218	Fitting-Oil Return, 8 MJIC x 8 FJIC x 4 MJIC (90°)
222	Gasket-Outlet Flange
223	Fitting-Oil Injection
224	Flange-Outlet
227	Air End CF75D6
228	Red Air Brake Tube, 1/4 in (cut to length)
229	Blue Air Brake Tube, 1/4 in (cut to length)
230	Green Air Brake Tube, 1/4 in (cut to length)
231	Compressor Replacement Kit
232	O-Ring, 3-7/8 X 4-1/4 in
235	Screw-Hex Hd, M16-2 x 30 mm
237	Washer-Flat, 8 mm
238	Washer-Flat, 16 mm
241	Sleeve-Internal Support
247	Shaft Seal Repair Kit
900	PMC Subassembly (Includes 901-914)
901	Pressure Regulator
902	Valve-Blowdown
903	Bracket
904	Adapter-Straight, 1/4 MNPT x 1/4 AB
905	Elbow-90°, 1/4 MNPT x 1/4 AB
907	Tee-Branch, 1/4 AB x 1/4 MNPT x 1/4 AB
908	Washer-Plain, 3/8 in
909	Screw-Hex Hd, 3/8-16 x 1/2 in
910	Valve-Solenoid
911	Nipple-Pipe, 1/4 NPT x 7/8 in
912	Tee-Standard, Pipe, 1/4 NPT
914	Tee-Street, 1/4 NPT

200
Compressor Subassembly
(includes 201-241 and 900)

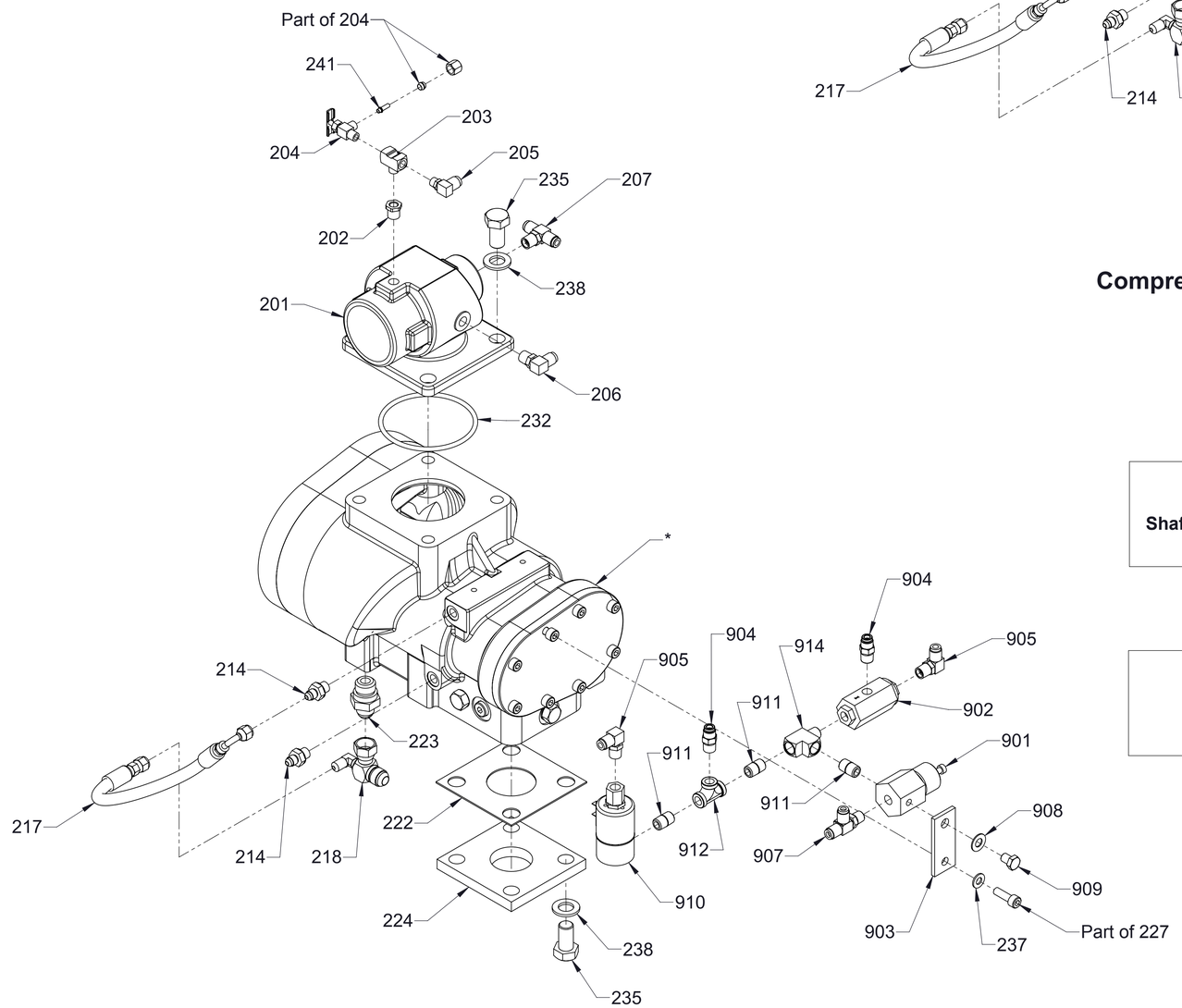

63-Black Tubing
228-Red Tubing
229-Blue Tubing
230-Green Tubing
(See Air Schematic)

Compressor-Air End
Non High-Rise Configuration

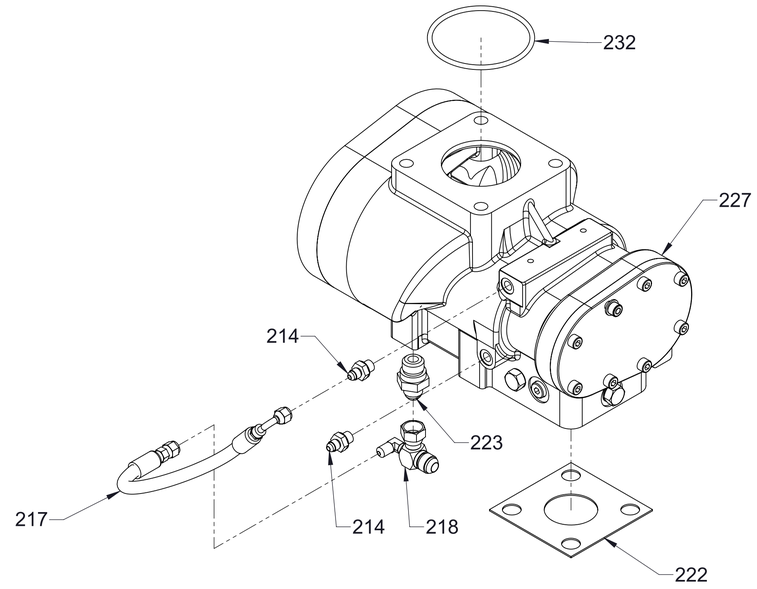

231

Compressor Replacement Kit

247
Shaft Seal Repair Kit

900
PMC Subassembly
(includes 901-914)

Ref No.	Description
63	Black Air Brake Tube, 1/4 in (cut to length)
64	Red Air Brake Tube, 1/4 in (cut to length)
65	Yellow Air Brake Tube, 1/4 in (cut to length)
200	Compressor Subassembly (Includes 201-241 and 900)
201	Inlet-Air, 90°
202	Bushing-Reducing, 1/4 MNPT x 1/8 FNPT
203	Tee-Branch, 1/8 MNPT x 1/8 FNPT x 1/8 FNPT
204	Valve-Trim, 1/8 MNPT x 1/4 AB
205	Elbow-90°, 1/8 MNPT x 1/4 AB
206	Elbow-90°, 1/4 MNPT x 1/4 AB
207	Tee-Branch, 1/4 MNPT x 1/4 AB x 1/4 AB
214	Adapter-Straight, 4 MJIC X 12 MM
217	Oil Injection Hose Assembly (Straight x 90°)
218	Fitting-Oil Return, 8 MJIC x 8 FJIC x 4 MJIC (90°)
222	Gasket-Outlet Flange
223	Fitting-Oil Injection
224	Flange-Outlet
227	Air End CF75D6
228	Red Air Brake Tube, 1/4 in (cut to length)
229	Blue Air Brake Tube, 1/4 in (cut to length)
230	Green Air Brake Tube, 1/4 in (cut to length)
231	Compressor Replacement Kit
232	O-Ring, 3-7/8 X 4-1/4 in
235	Screw-Hex Hd, M16-2 x 30 mm
237	Washer-Flat, 8 mm
238	Washer-Flat, 16 mm
240	Black Air Brake Tube, 1/4 in (cut to length)
241	Sleeve-Internal Support
247	Shaft Seal Repair Kit
900	PMC Subassembly (Includes 901-914)
901	Pressure Regulator
902	Valve-Blowdown
903	Bracket-Mounting, PMC, High Rise
904	Adapter-Straight, 1/4 MNPT x 1/4 AB
905	Elbow-90°, 1/4 MNPT x 1/4 AB
907	Tee-Branch, 1/4 AB x 1/4 MNPT x 1/4 AB
908	Washer-Plain, 3/8 in
909	Screw-Hex Hd, 3/8-16 x 1/2 in
911	Nipple-Pipe, 1/4 NPT x 7/8 in
914	Tee-Street, 1/4 NPT

200
Compressor Subassembly
(includes 201-241 and 900)

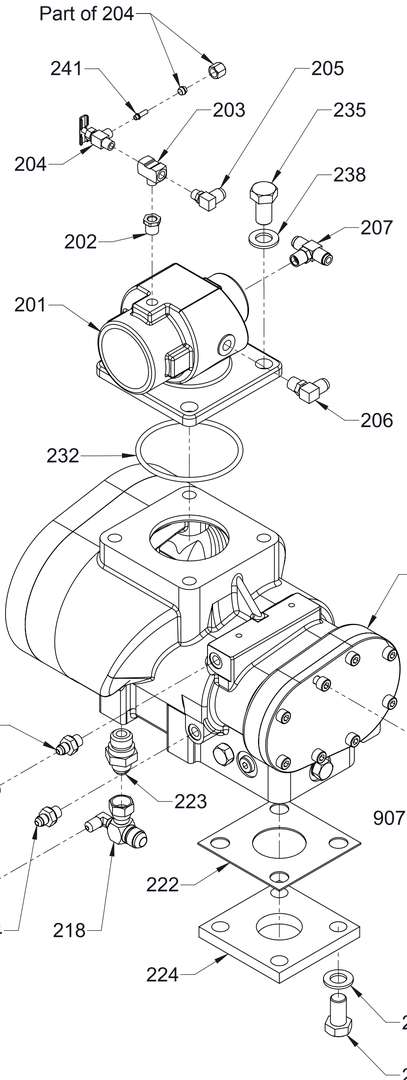

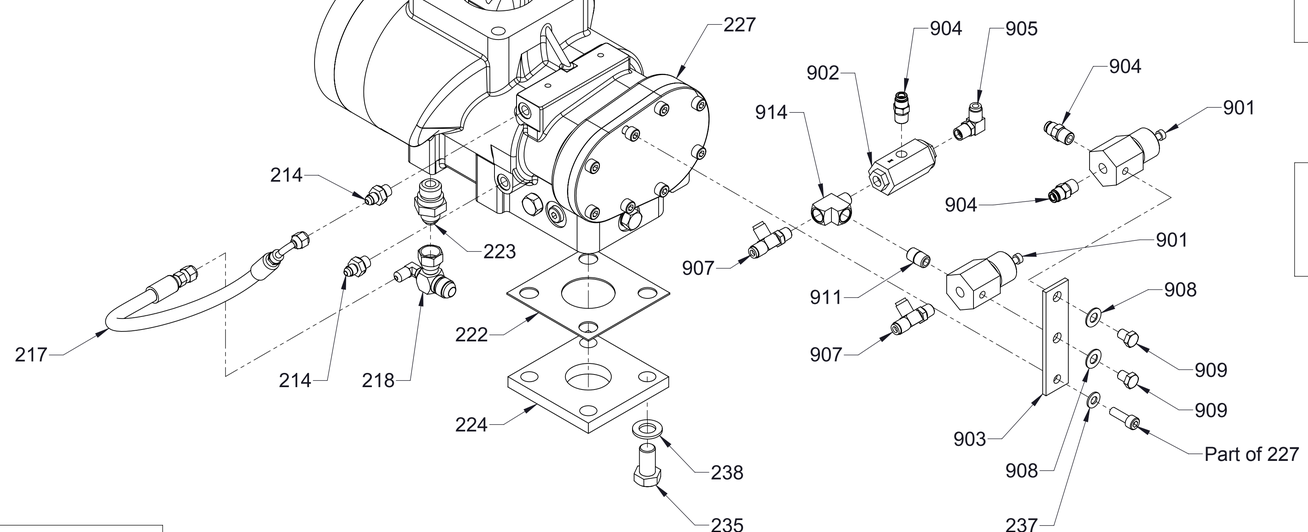

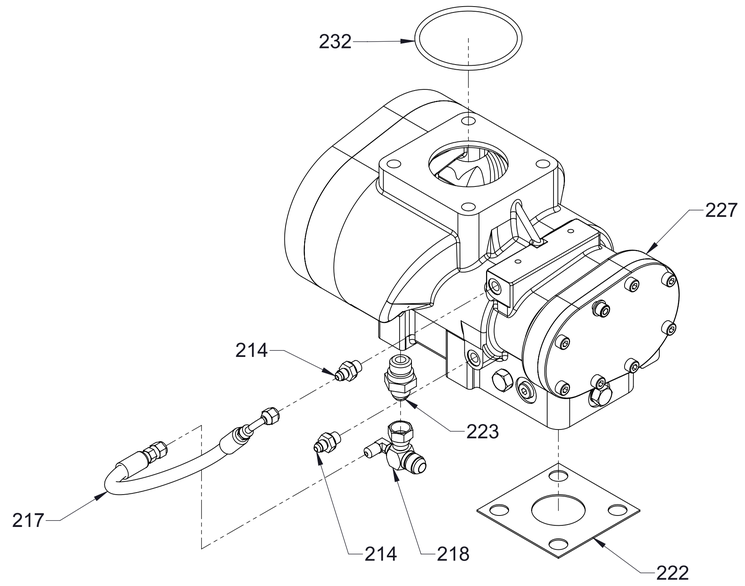

231

Compressor Replacement Kit
(See previous page for Bill of Materials)

247
Shaft Seal Repair Kit

900
PMC Subassembly
(includes 901-914)

65-Yellow Tubing
64 or 228-Red Tubing
229-Blue Tubing
230-Green Tubing
63 or 240-Black Tubing
(See Air Schematic)

Compressor-Air End
High-Rise Configuration
(See previous page for Compressor Bill of Materials)

Ref No.	Description
42	Clamp-Hose, 3-1/2 in
43	T-Bolt, 3-1/2 in
44	Elbow-Rubber 3 in x 90°
58	Air Inlet Tube, 3 x 48 in
59	Filter-Air, 3 in
200	Compressor Subassembly

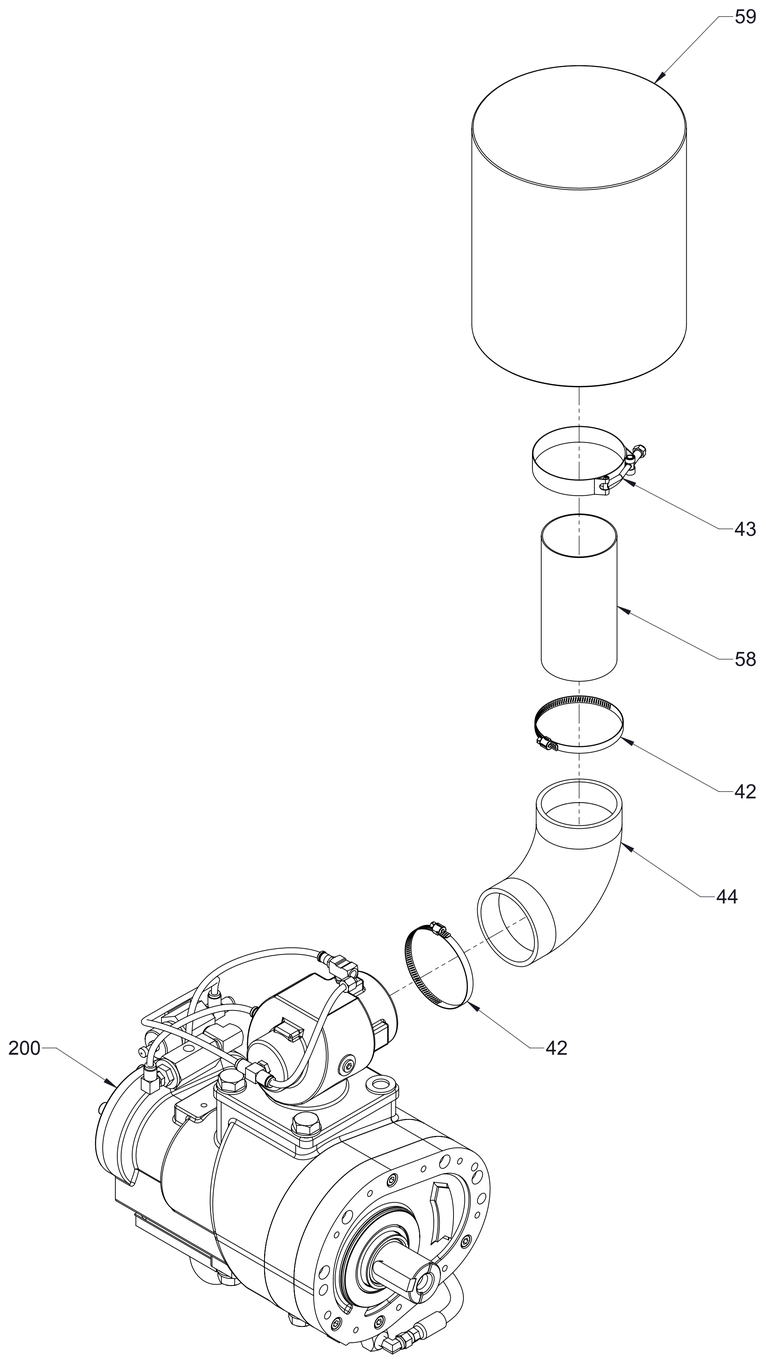

Compressor-Air Inlet
(Based on installation, configuration may vary from diagram)

Ref No.	Description
300	Auto-Sync Subassembly (Includes 301-310)
301	Solenoid Valve
302	Adapter-Straight, 1/4 MNPT x 1/4 AB
303	Elbow-90°, 1/4 MNPT x 1/4 AB
304	Tee-Branch, 1/4 MNPT x 1/4 AB x 1/4 AB
305	Tee-Branch, 1/4 AB x 1/4 MNPT x 1/4 AB
306	Red Air Brake Tube, 1/4 in (cut to length)
307	Bracket-Angle, Auto-Sync
310	Screw-Machine, Pan Hd, #10-32 x 1/2 in

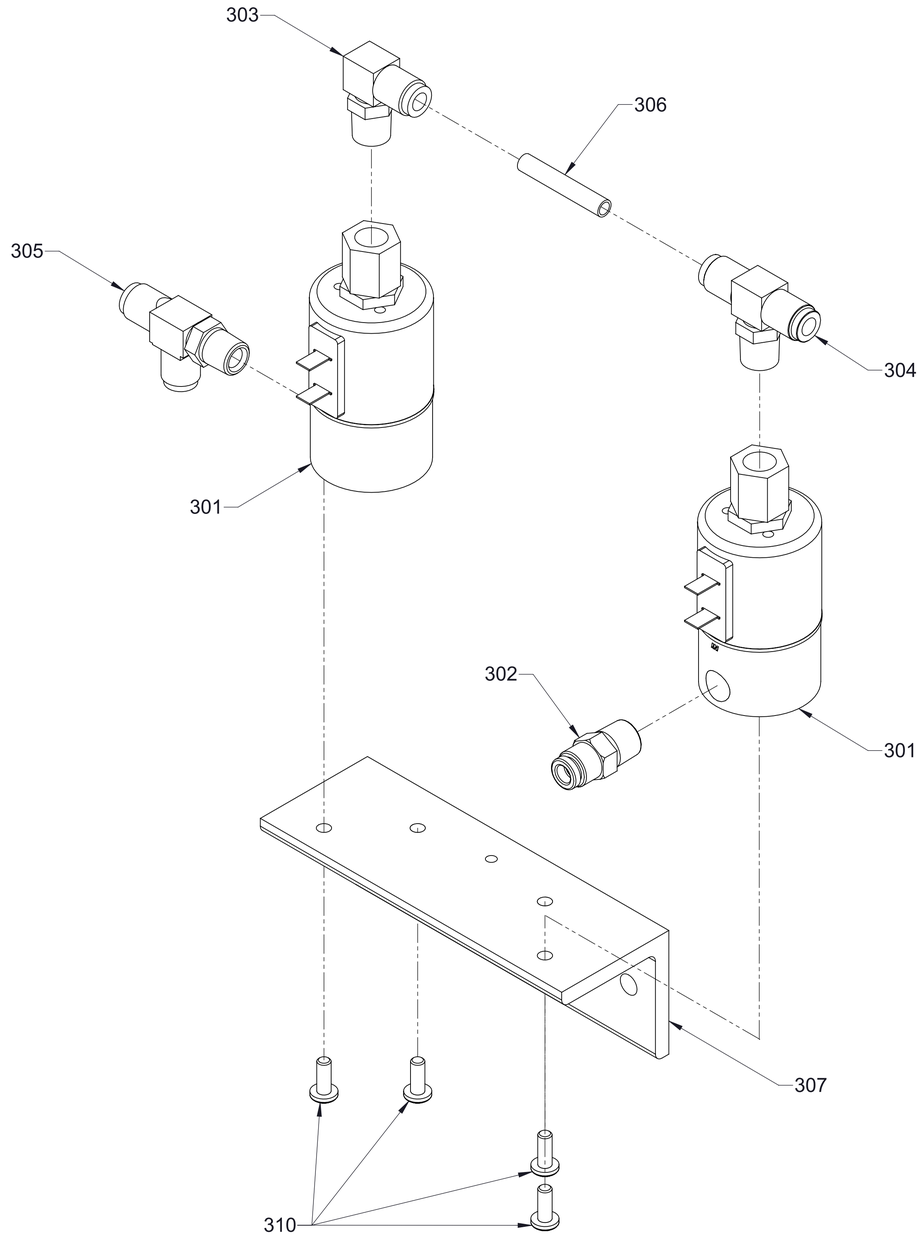

300
Auto-Sync Subassembly
(includes 301-310)

Compressor-Auto-Sync
(Used on High-Rise compressor only)

Note:
1. See High-Rise air schematic for tubing.

Ref No.	Description
600	Separator Subassembly (Includes 601-625)
601	Scavenger Fitting (Includes Ferrule and Nut)
602	Adapter-Straight, 24 MJIC x 1-1/4 BSP
604	Bracket-Separator Filter, Large
605	Scavenger Tube Assembly (Includes Ferrule and Nut)
606	Fitting-Restrictor, 5/16 in
607	Filter Head, Large
608	Cartridge-Separator Filter, Large
609	Elbow-Street, 1-1/4 NPT, 90°
610	Nipple-Close, 3/4 in
611	Control Valve-Minimum Pressure, 1-1/4 in
612	Valve-Check, 3/4 in
613	Bushing-Reducing, 1-1/4 MNPT x 3/4 FNPT
614	Screw-Hex Hd, M10-1.5 x 20 mm
615	Washer-Flat, 10 mm
616	Tee-Run, 1/4 FNPT x 1/4 MNPT x 1/4 FNPT
618	Washer, 1.928 in OD
619	Plug-Pipe, Headless, 3/8 NPT
620	Bushing-Reducing, 3/8 MNPT x 1/4 FNPT
622	Check Valve Rebuild Kit
623	Minimum Pressure Control Valve Repair Kit
624	Adapter-Straight, 1/4 MNPT x 1/4 AB
625	Transducer-Pressure

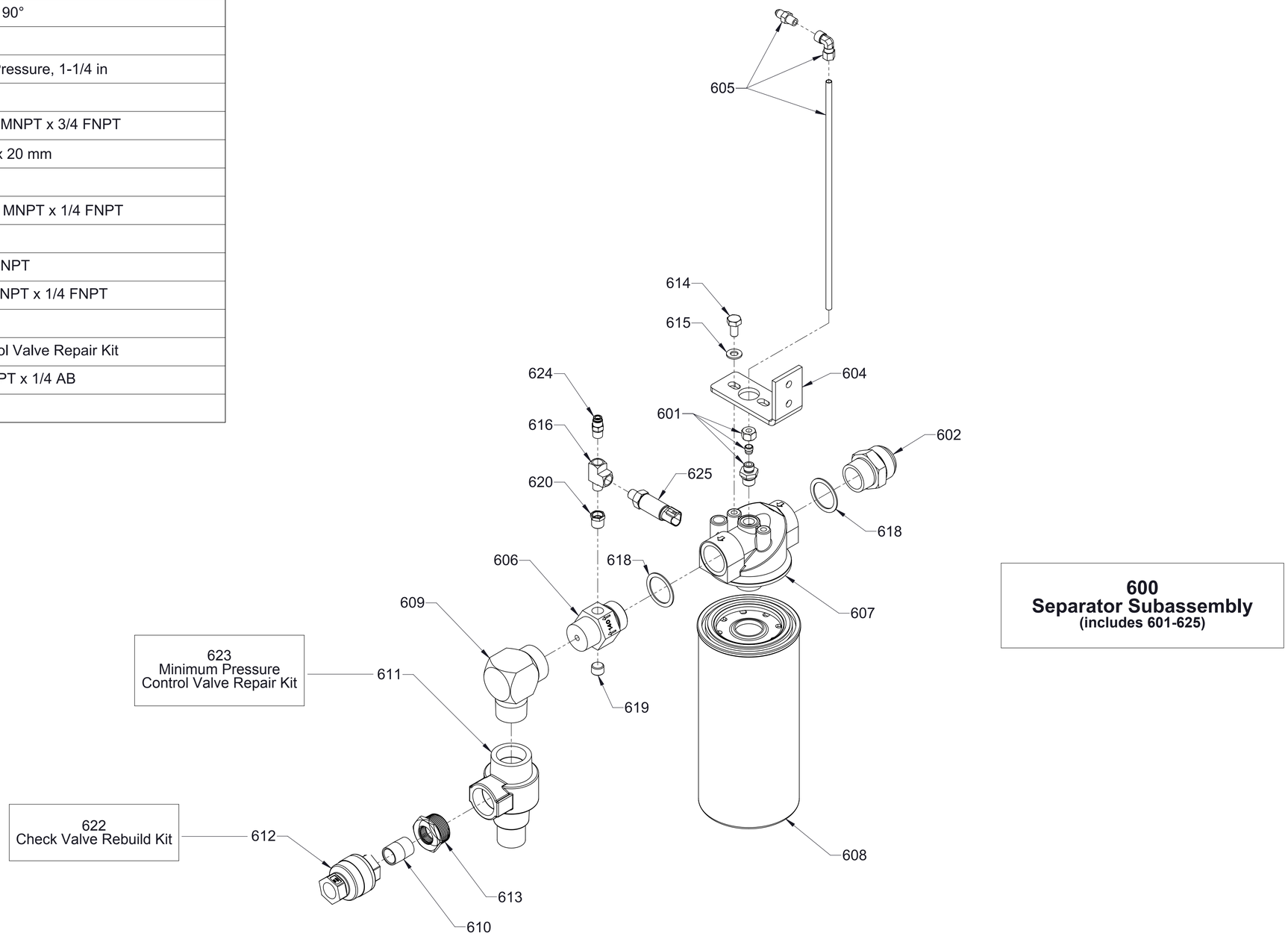

600
Separator Subassembly
(includes 601-625)

Separator Filter

Note:
1. See air and hydraulic schematics for tubing and hoses.

Ref No.	Description
500	Sump Subassembly (Includes 501-520)
501	Sump-Vertical, 10 in
502	Elbow-Street, 1/2 NPT, 90°
503	Valve-Pop Off, 1/2 in
504	Adapter-Straight, 24 MJIC x 1-1/2 MNPT
505	Cap with Chain, 1 NPSH
506	Nipple, 1-1/2 NPT x 1 NPSH
507	Sight Glass, 1-1/2 in
512	Plug-Pipe, 1/2 NPT
513	FITTING - CONNECTOR, 12 MJIC X 3/4 MNPT
519	Temperature Sender
520	Bushing-Reducing, 1/2 MNPT x 1/4 FNPT

500
Sump Subassembly
(includes 501-520)

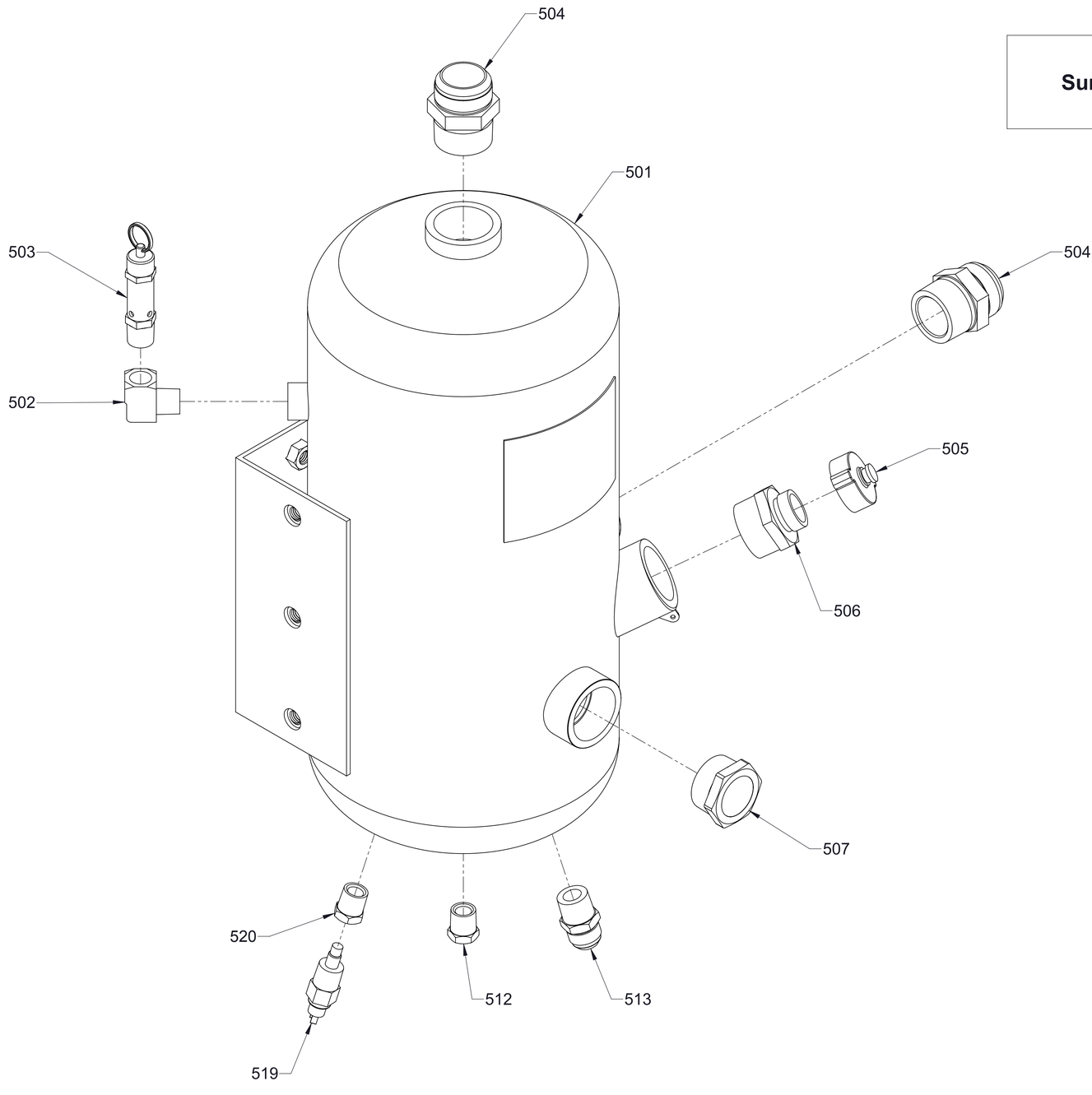

Sump

Note:
1. See hydraulic schematic for hoses.

Ref No.	Description
400	Oil Cooler Subassembly (Includes 401-418)
401	Nipple-Pipe, 3/4 NPT x 4 in
402	Adapter-Straight, 8 MJIC x 3/4 MNPT
404	Hydraulic Filter Head, Large
405	Filter-Oil
406	Large Cooler (Includes Brackets and Pipe Plugs)
407	Bushing-Reducing, 1-1/2 MNPT x 3/4 FNPT
408	Bushing-Reducing, 1-1/2 MNPT x 1/2 FNPT
409	Elbow-Street, 90°, 3/4 NPT
418	Adapter-Straight, 8 MJIC x 1/2 MNPT

400
Oil Cooler Subassembly
(includes 401-418)

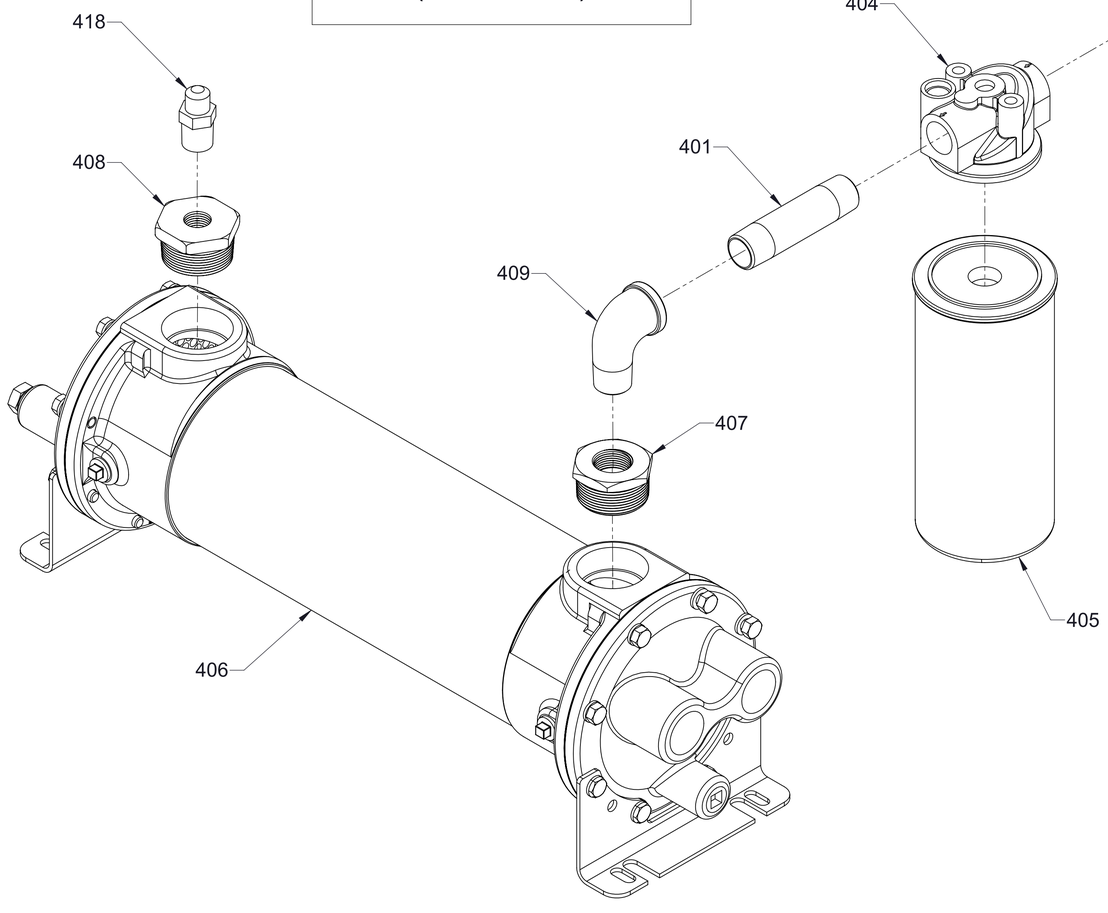

Oil Cooler, Filter and Water Strainer

Ref No.	Description
450	Panel Strainer Subassembly (Includes 451-456)
451	Strainer-Panel Mounted
452	Elbow-90°, 1/2 MNPT x 1/2 AB
453	Bushing-Reducing, Pipe, 1 X 1/2, Brass
454	Plug-Pipe, Hex Head, 1 NPT
455	Plug-Pipe, Headless, 1/4 NPT
456	Adapter−Straight, 1/2 AB x 1/2 MNPT

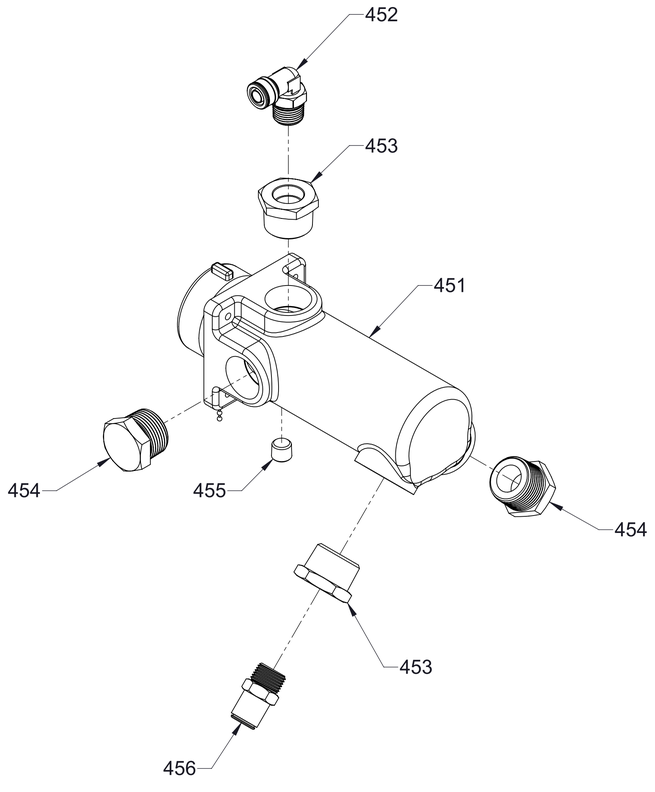

450
Panel Strainer Subassembly

Ref No.	Description
63	Black Air Brake Tube, 1/4 in (cut to length)
201	Inlet-Air, 2-1/2 in, 90°
228	Red Air Brake Tube, 1/4 in (cut to length)
229	Blue Air Brake Tube, 1/4 in (cut to length)
230	Green Air Brake Tube, 1/4 in (cut to length)
600	Separator Subassembly
900	PMC Subassembly

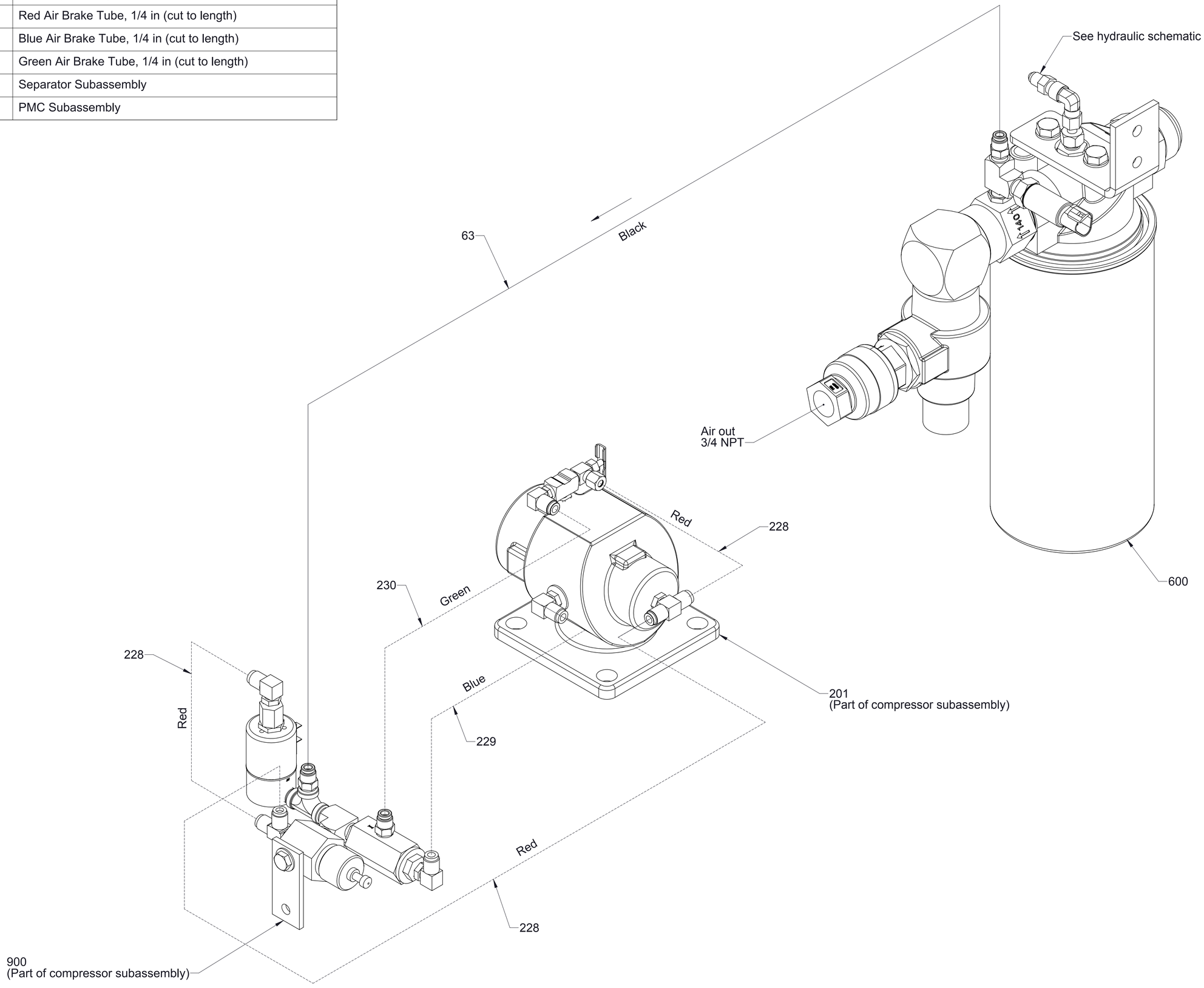

Schematic-Air
(Non High-Rise models)

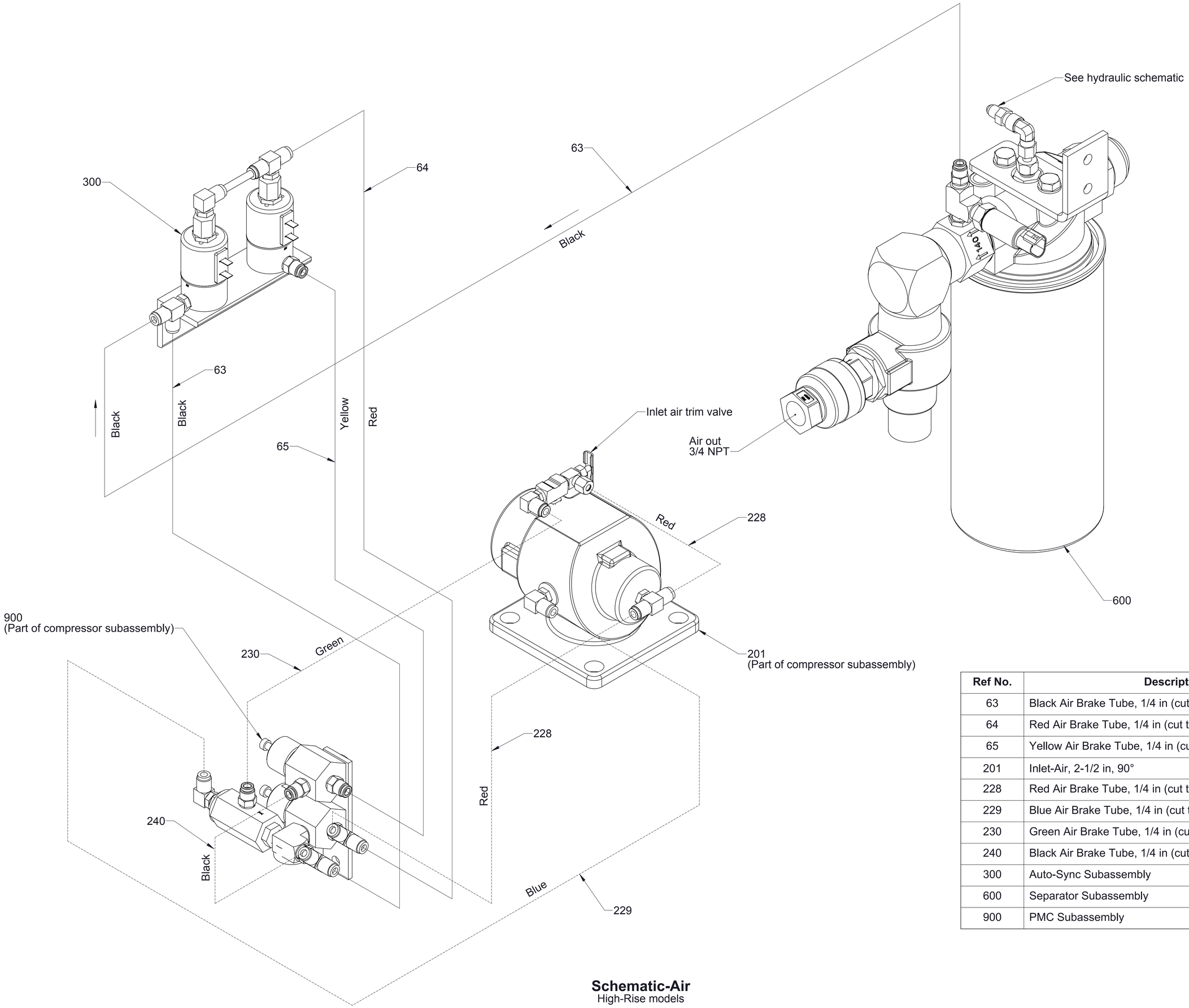

Ref No.	Description
63	Black Air Brake Tube, 1/4 in (cut to length)
64	Red Air Brake Tube, 1/4 in (cut to length)
65	Yellow Air Brake Tube, 1/4 in (cut to length)
201	Inlet-Air, 2-1/2 in, 90°
228	Red Air Brake Tube, 1/4 in (cut to length)
229	Blue Air Brake Tube, 1/4 in (cut to length)
230	Green Air Brake Tube, 1/4 in (cut to length)
240	Black Air Brake Tube, 1/4 in (cut to length)
300	Auto-Sync Subassembly
600	Separator Subassembly
900	PMC Subassembly

Schematic-Air
High-Rise models

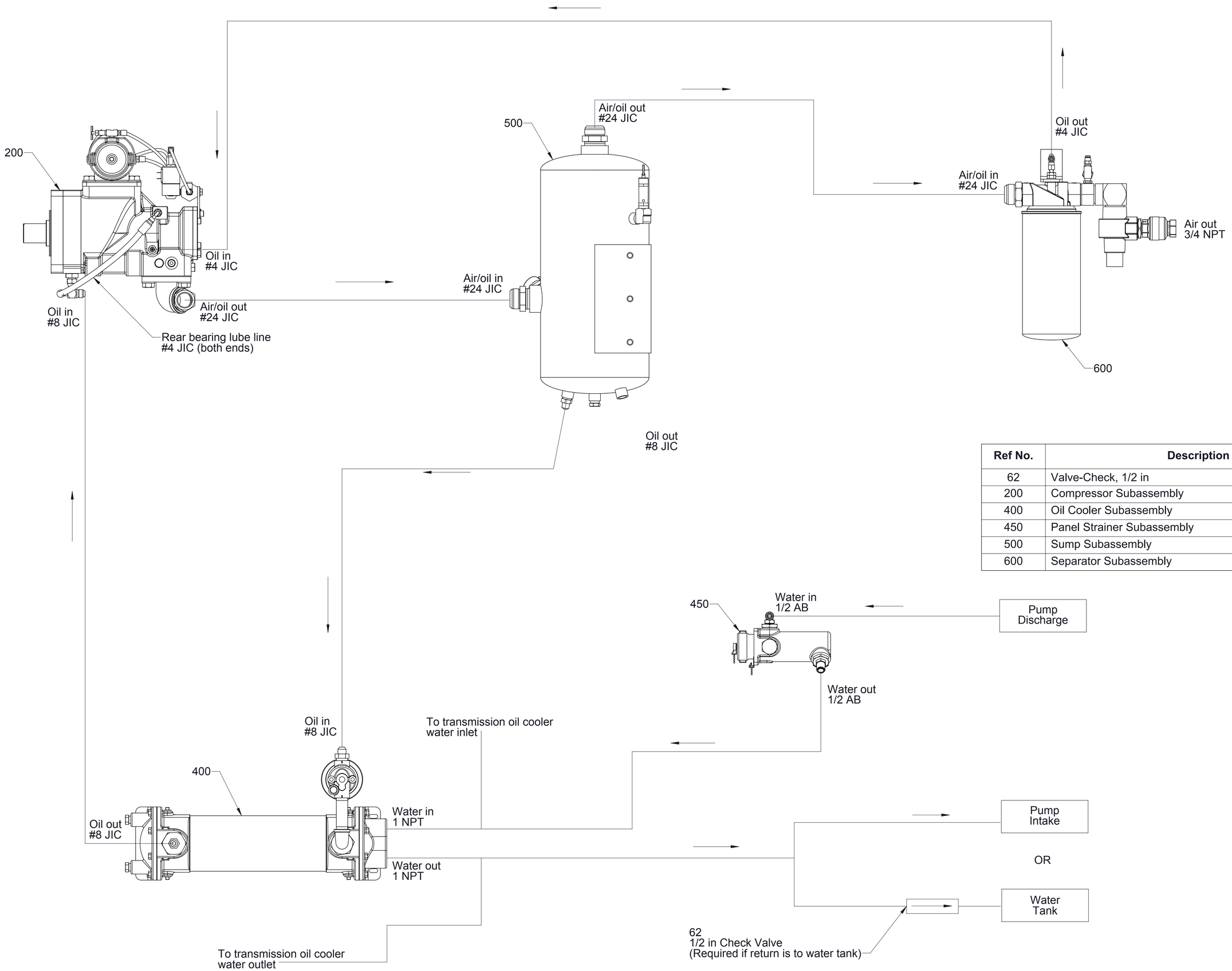

Ref No.	Description
62	Valve-Check, 1/2 in
200	Compressor Subassembly
400	Oil Cooler Subassembly
450	Panel Strainer Subassembly
500	Sump Subassembly
600	Separator Subassembly

Schematic-Hydraulic Lines

Note:
Hoses and fittings are optional from Waterous. May have been furnished by OEM.
See Hoses and Fittings Service Parts List SPL83368.