WATEROUS

Document Number	Issue Date	Rev. Date
SPL83741	1/31/2020	09/11/20

Heavy Duty K Transmission Assy 83741

Pump Model	Impeller Shaft type	Extended Shaft for CAFS Drive	Input Type	See Sheet
CXN, CXS, CXV	One-Piece	No	Standard 1-3/8in. SAE Spline	2
			Hydraulic Flange Adapter	3
		Yes	Standard 1-3/8in. SAE Spline	4
CGV, CGVR, CGVG	One-Piece	N/A	Standard 1-3/8in. SAE Spline	5
			Hydraulic Flange Adapter	6
CM, CS	Separable	N/A	Standard 1-3/8in. SAE Spline	7
HL200, HL300, HL400	Separable	No	Standard 1-3/8in. SAE Spline	8
		Yes	Standard 1-3/8in. SAE Spline	9
Oil Cooler Fittings -- CX, CG				10
Oil Cooler Fittings -- HL200, HL300, HL400, HLU				11
Oil Cooler Fittings -- HL400 with Short Intake Fitting				12
Oil Cooler Fittings -- CM, CS				13
Pump Mounting Positions - Oil Level, Breather, Drain, and Vent locations				14-15

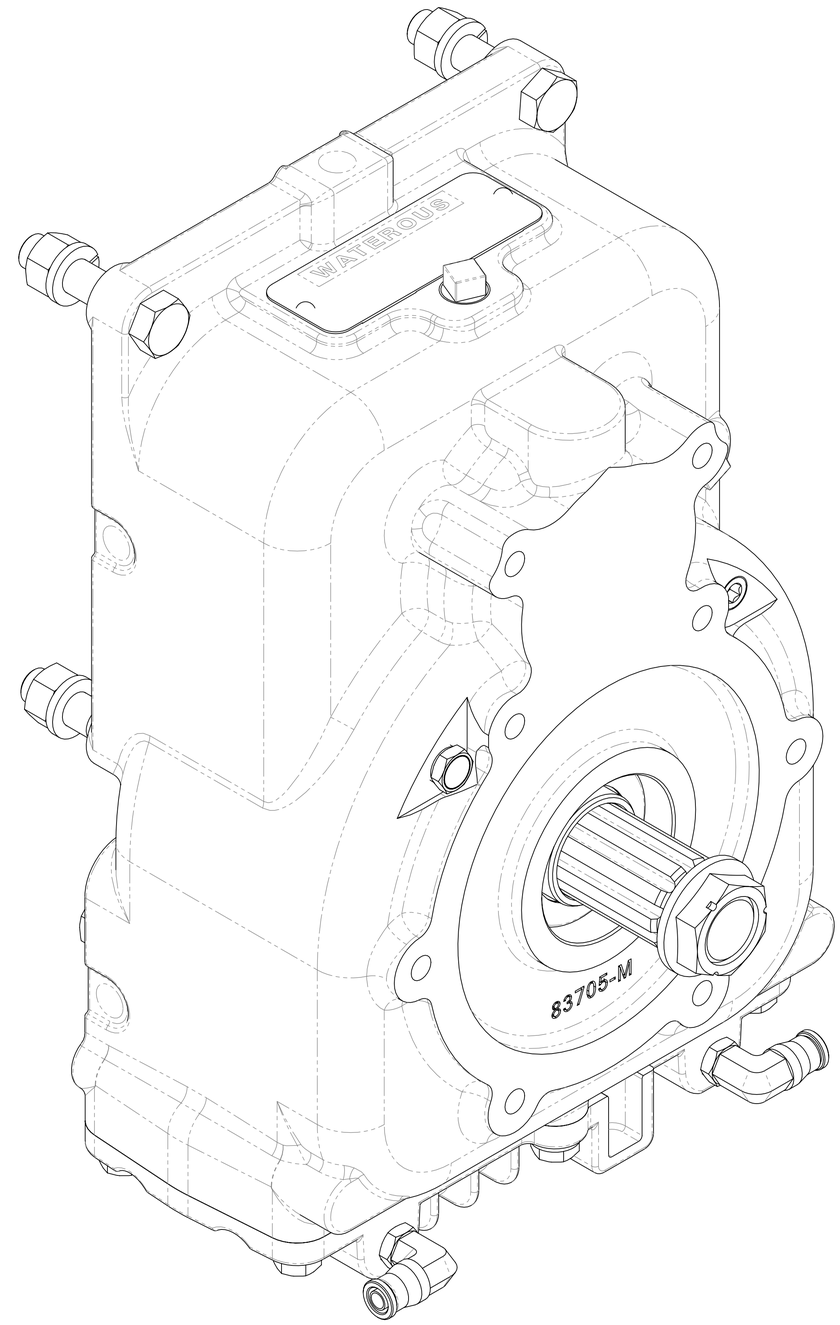

Ref No.	Description
T1	Gear-Driven
T2	Gear-Drive
T3	Case-Transmission
T4	Pan-Oil, Cooler
T5	Housing-Bearing
T6	Cover-Bearing
T7	Gasket-Molded
T8	Shaft-Drive
T9	Bearing, Ball, Single Row, 40 x 90 x 23 mm
T10	Spacer-Shaft, Impeller
T11	O-Ring, 4-3/8 x 4-5/8 in
T12	O-Ring, 3-1/4 x 3-1/2 in
T13	Seal-Oil, 1-5/8 x 2-7/16 in
T14	Seal-Oil, 1-5/8 x 2-1/2 in
T15	Ring-Retaining, External, 1-9/16 in Shaft Dia
T24	Screw-Drive, #6 x 1/4 in
T25	Screw-Hex Hd, 3/8-16 x 1 in
T26	Washer-Lock, 3/8 in
T27	Screw-Hex Hd, 1/2-13 x 2-1/4 in
T28	Stud-Coarse, 1/2-13 x 2-1/4 in
T29	Washer-Lock, 1/2 in
T30	Nut-Hex, 1/2-13
T36	Bearing, Ball, Double Row, 35 x 72 x 27 mm
T38	Washer-Lock, Bearing, W07
T39	Nut-Lock, Bearing, N07
T41	Plate-Serial
T44	Bearing, Ball, Single Row, 35 x 80 x 21 mm
T45	Bearing, Ball, Double Row, 35 x 80 x 34.9 mm
T46	Sleeve-Seal, Oil
T47	Nut-Self Locking, 1-20 UNEF-2B
T48	Key-Square, 3/8 x 1-3/4 in

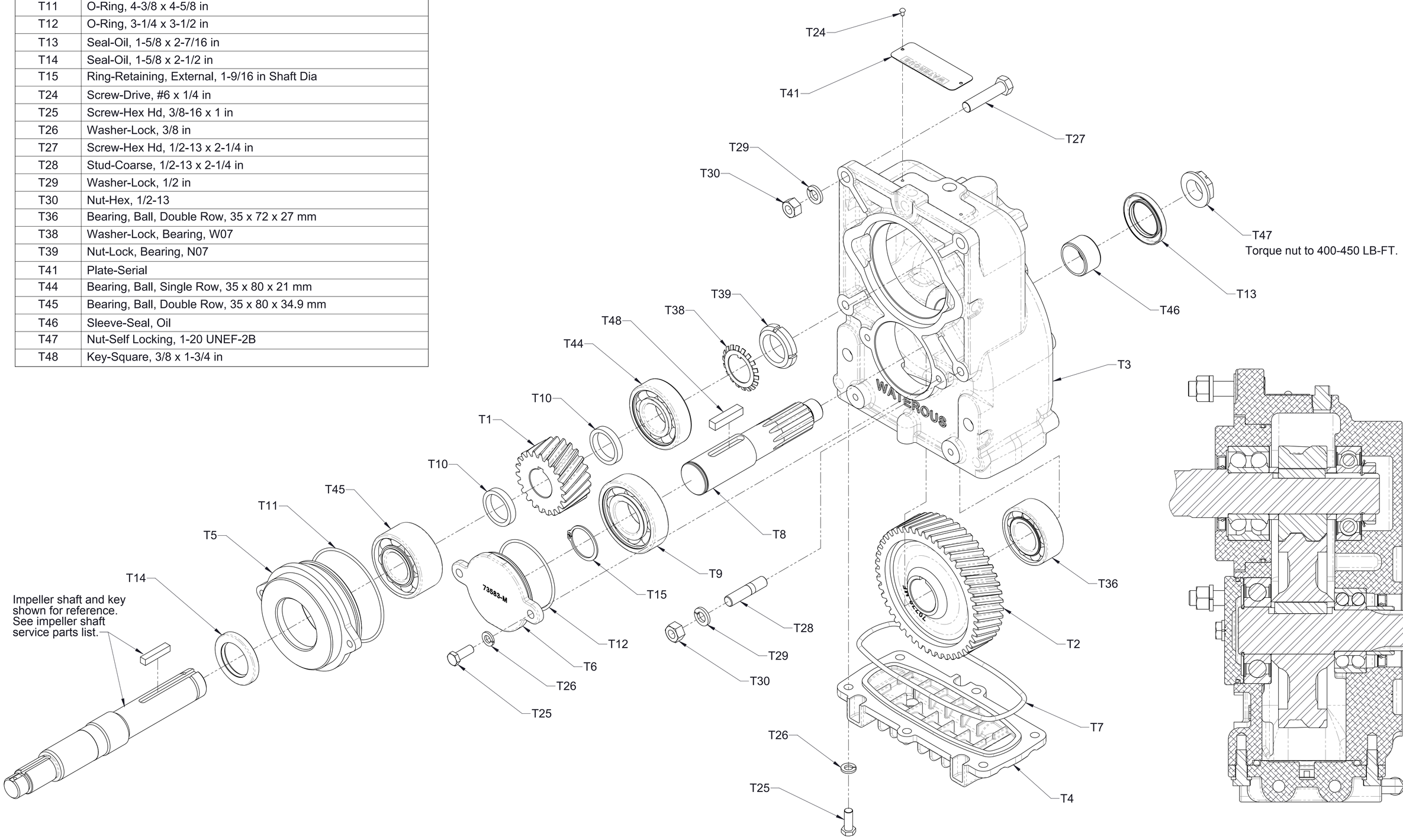

Transmission Assembly
One Piece Impeller Shaft, 1-3/8in. SAE Splined Input
Without Extended Shaft
CXN, CXS, CXV

Ref No.	Description
T1	Gear-Driven
T2	Gear-Drive
T3	Case-Transmission
T4	Pan-Oil, Cooler
T5	Housing-Bearing
T6	Cover-Bearing
T7	Gasket-Molded
T8	Shaft-Drive
T9	Bearing, Ball, Single Row, 40 x 90 x 23 mm
T10	Spacer-Shaft, Impeller
T11	O-Ring, 4-3/8 x 4-5/8 in
T12	O-Ring, 3-1/4 x 3-1/2 in
T13	Seal-Oil, 1-5/8 x 2-7/16 in
T14	Seal-Oil, 1-5/8 x 2-1/2 in
T15	Ring-Retaining, External, 1-9/16 in Shaft Dia
T24	Screw-Drive, #6 x 1/4 in
T25	Screw-Hex Hd, 3/8-16 x 1 in
T26	Washer-Lock, 3/8 in
T27	Screw-Hex Hd, 1/2-13 x 2-1/4 in
T28	Stud-Coarse, 1/2-13 x 2-1/4 in
T29	Washer-Lock, 1/2 in
T30	Nut-Hex, 1/2-13
T31	Bushing-Adapter
T32	Adapter-Case Gear, Class C, Hyd Motor
T33	Screw-Cap, Hex Soc Hd, 7/16-14 x 1-1/4 in
T36	Bearing, Ball, Double Row, 40 x 80 x 30.2 mm
T38	Washer-Lock, Bearing, W07
T39	Nut-Lock, Bearing, N07
T41	Plate-Serial
T44	Bearing, Ball, Single Row, 35 x 80 x 21 mm
T45	Bearing, Ball, Double Row, 35 x 80 x 34.9 mm
T48	Key-Square, 3/8 x 1-3/4 in

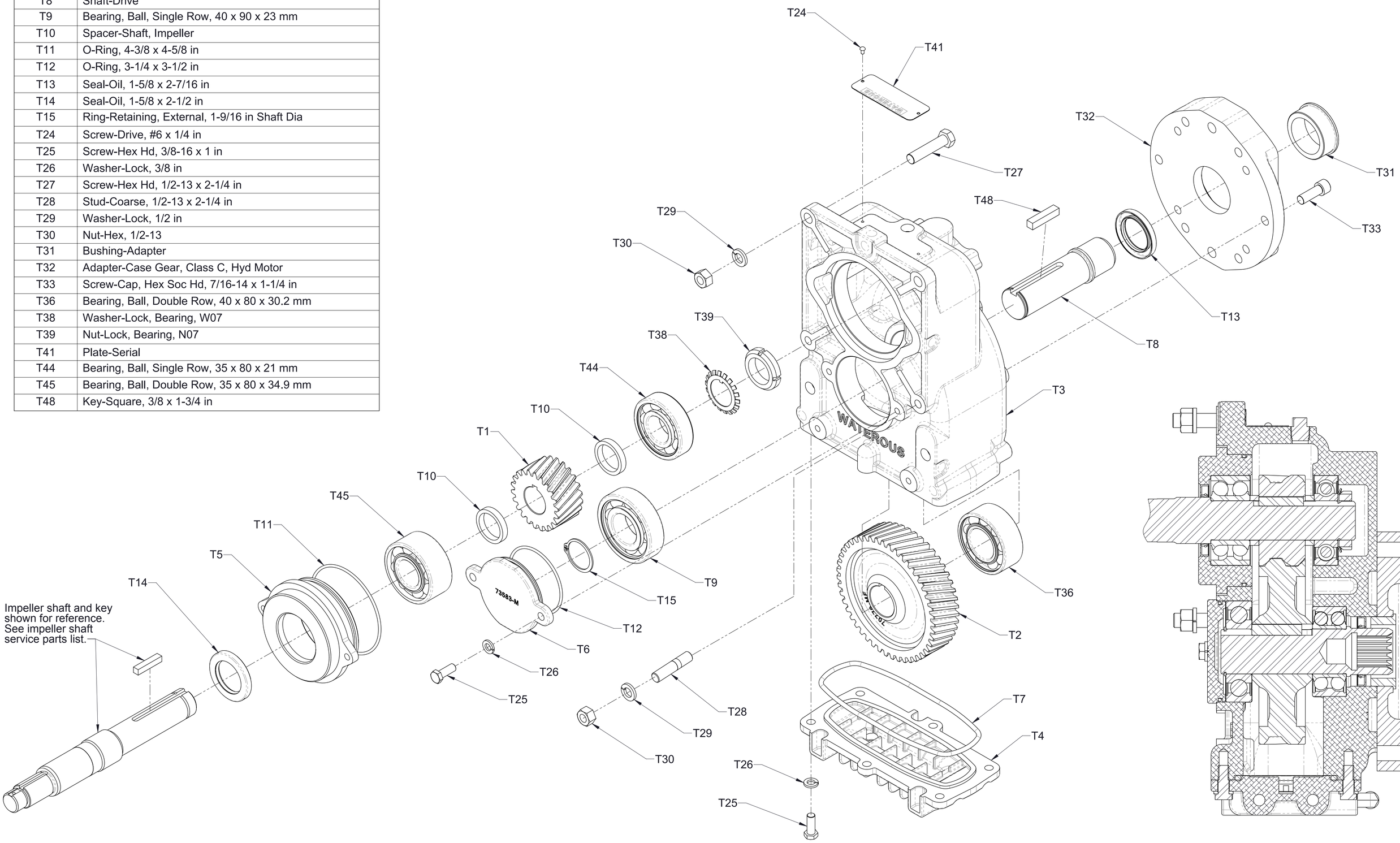

Transmission Assembly
One Piece Impeller Shaft, SAE Class C Hydraulic Adapter
Without Extended Shaft
CXN, CXS, CXV

Ref No.	Description	Ref No.	Description
T1	Gear-Driven	T26	Washer-Lock, 3/8 in
T2	Gear-Drive	T27	Screw-Hex Hd, 1/2-13 x 2-1/4 in
T3	Case-Transmission	T28	Stud-Coarse, 1/2-13 x 2-1/4 in
T4	Pan-Oil, Cooler	T29	Washer-Lock, 1/2 in
T5	Housing-Bearing	T30	Nut-Hex, 1/2-13
T6	Cover-Bearing	T36	Bearing, Ball, Double Row, 35 x 72 x 27 mm
T7	Gasket-Molded	T37	Seal-Oil, 1-1/4 x 2 in
T8	Shaft-Drive, Extended	T38	Washer-Lock, Bearing, W07
T9	Bearing, Ball, Single Row, 40 x 90 x 23 mm	T39	Nut-Lock, Bearing, N07
T10	Spacer-Shaft, Impeller	T41	Plate-Serial
T11	O-Ring, 4-3/8 x 4-5/8 in	T44	Bearing, Ball, Single Row, 35 x 80 x 21 mm
T12	O-Ring, 3-1/4 x 3-1/2 in	T45	Bearing, Ball, Double Row, 35 x 80 x 34.9 mm
T13	Seal-Oil, 1-5/8 x 2-7/16 in	T46	Sleeve-Seal, Oil
T14	Seal-Oil, 1-5/8 x 2-1/2 in	T47	Nut-Self Locking, 1-20 UNEF-2B
T15	Ring-Retaining, External, 1-9/16 in Shaft Dia	T48	Key-Square, 3/8 x 1-3/4 in
T24	Screw-Drive, #6 x 1/4 in	T50	Spacer-Shaft, Driven
T25	Screw-Hex Hd, 3/8-16 x 1 in		

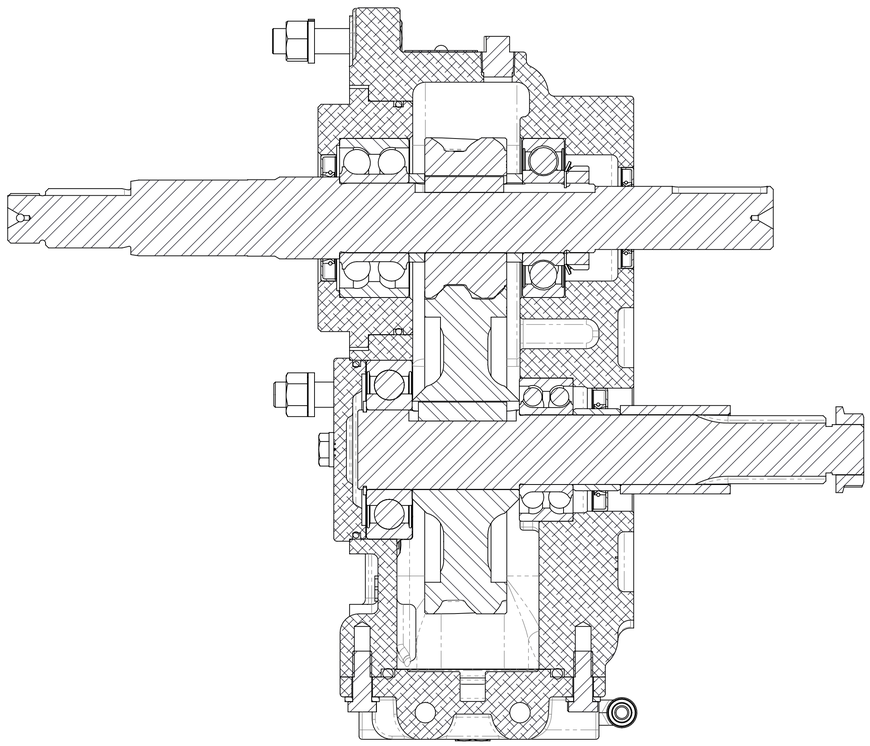

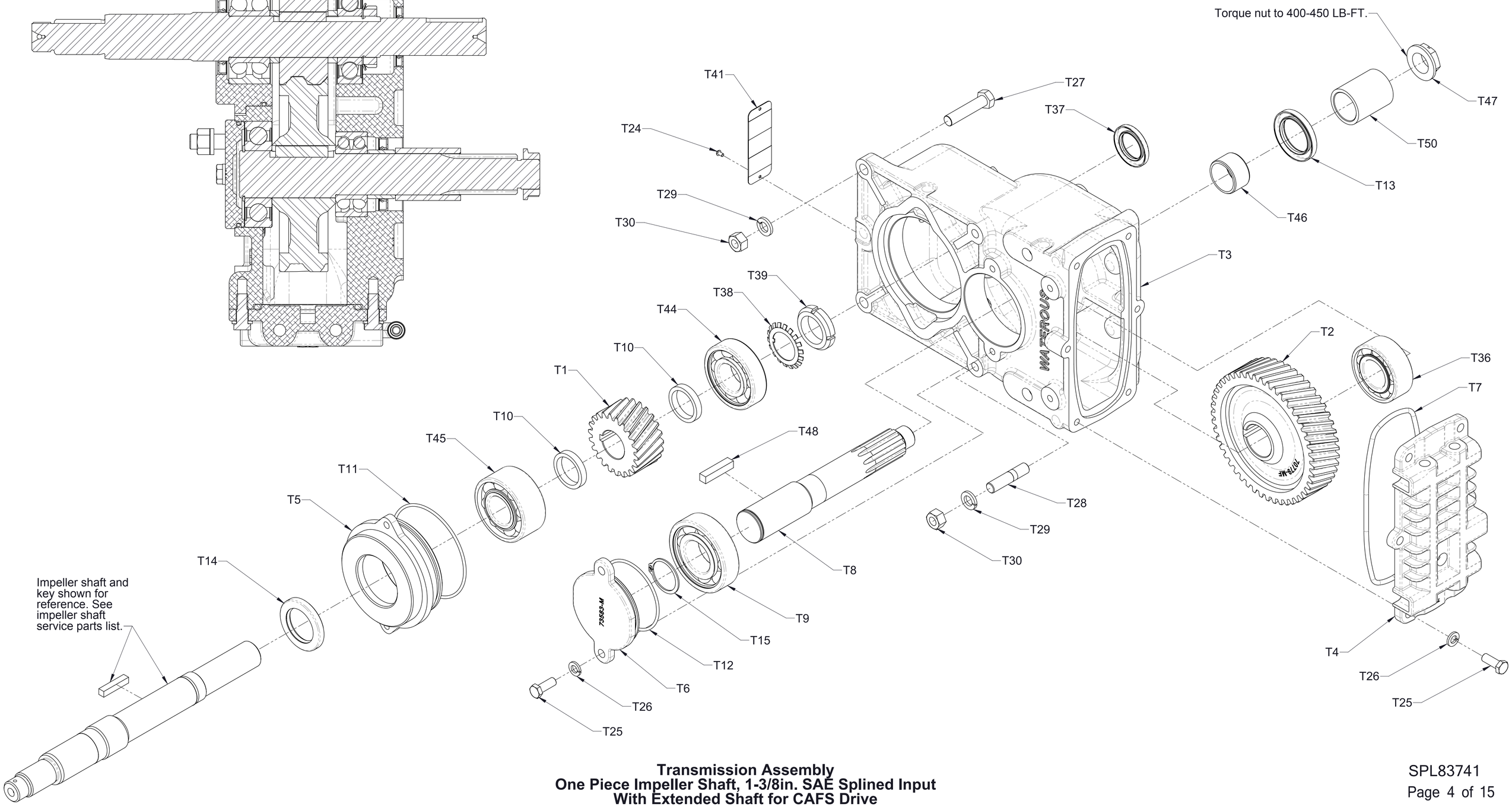

Transmission Assembly
One Piece Impeller Shaft, 1-3/8in. SAE Splined Input
With Extended Shaft for CAFS Drive
CXN, CXS, CXV

Ref No.	Description
T1	Gear-Driven
T2	Gear-Drive
T3	Case-Transmission
T4	Pan-Oil, Cooler
T5	Housing-Bearing
T6	Cover-Bearing
T6	Disk-Cover
T7	Gasket-Molded
T8	Shaft-Drive
T9	Bearing, Ball, Single Row, 40 x 90 x 23 mm
T10	Spacer-Shaft, Impeller
T11	O-Ring, 4-3/8 x 4-5/8 in
T12	O-Ring, 3-1/4 x 3-1/2 in
T13	Seal-Oil, 1-5/8 x 2-7/16 in
T14	Seal-Oil, 1-5/8 x 2-1/2 in
T15	Ring-Retaining, External, 1-9/16 in Shaft Dia
T24	Screw-Drive, #6 x 1/4 in
T25	Screw-Hex Hd, 3/8-16 x 1 in
T26	Washer-Lock, 3/8 in
T27	Screw-Hex Hd, 1/2-13 x 2-1/4 in
T28	Stud-Coarse, 1/2-13 x 2-1/4 in
T29	Washer-Lock, 1/2 in
T30	Nut-Hex, 1/2-13
T35	Spacer-Shaft, Impeller
T36	Bearing, Ball, Double Row, 35 x 72 x 27 mm
T38	Washer-Lock, Bearing, W07
T39	Nut-Lock, Bearing, N07
T41	Plate-Serial
T44	Bearing, Ball, Single Row, 35 x 80 x 21 mm
T46	Sleeve-Seal, Oil
T47	Nut-Self Locking, 1-20 UNEF-2B
T48	Key-Square, 3/8 x 1-3/4 in

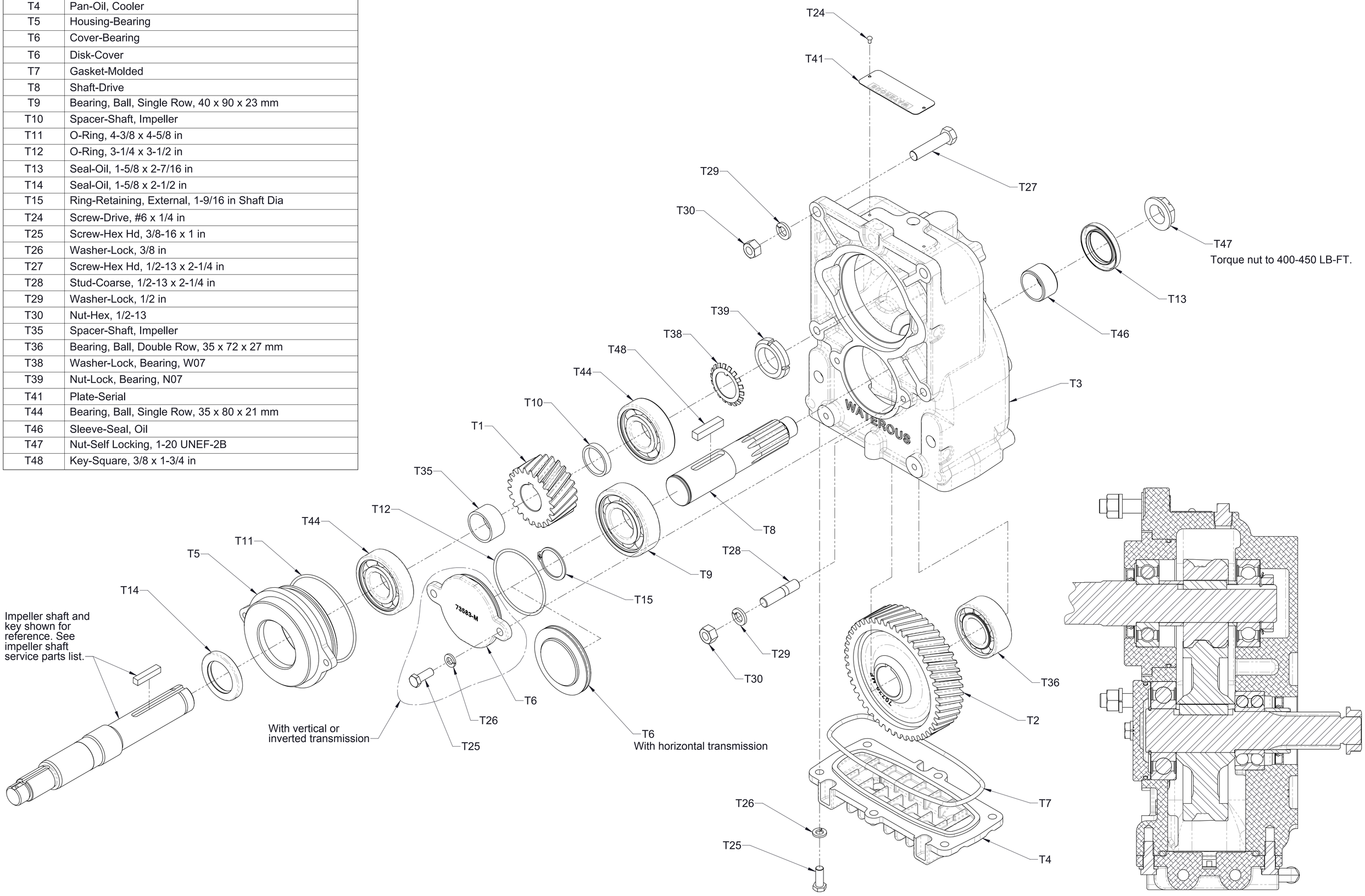

Transmission Assembly
One Piece Impeller Shaft, 1-3/8in. SAE Splined Input
Without Extended Shaft
CGV, CGVG, CGVR

Ref No.	Description
T1	Gear-Driven
T2	Gear-Drive
T3	Case-Transmission
T4	Pan-Oil, Cooler
T5	Housing-Bearing
T6	Disk-Cover
T6	Cover-Bearing
T7	Gasket-Molded
T8	Shaft-Drive
T9	Bearing, Ball, Single Row, 40 x 90 x 23 mm
T10	Spacer-Shaft, Impeller
T11	O-Ring, 4-3/8 x 4-5/8 in
T12	O-Ring, 3-1/4 x 3-1/2 in
T13	Seal-Oil, 1-5/8 x 2-7/16 in
T14	Seal-Oil, 1-5/8 x 2-1/2 in
T15	Ring-Retaining, External, 1-9/16 in Shaft Dia
T24	Screw-Drive, #6 x 1/4 in
T25	Screw-Hex Hd, 3/8-16 x 1 in
T26	Washer-Lock, 3/8 in
T27	Screw-Hex Hd, 1/2-13 x 2-1/4 in
T28	Stud-Coarse, 1/2-13 x 2-1/4 in
T29	Washer-Lock, 1/2 in
T30	Nut-Hex, 1/2-13
T31	Bushing-Adapter
T32	Adapter-Case Gear, Class C, Hyd Motor
T33	Screw-Cap, Hex Soc Hd, 7/16-14 x 1-1/4 in
T35	Spacer-Shaft, Impeller
T36	Bearing, Ball, Double Row, 40 x 80 x 30.2 mm
T38	Washer-Lock, Bearing, W07
T39	Nut-Lock, Bearing, N07
T41	Plate-Serial
T44	Bearing, Ball, Single Row, 35 x 80 x 21 mm
T48	Key-Square, 3/8 x 1-3/4 in

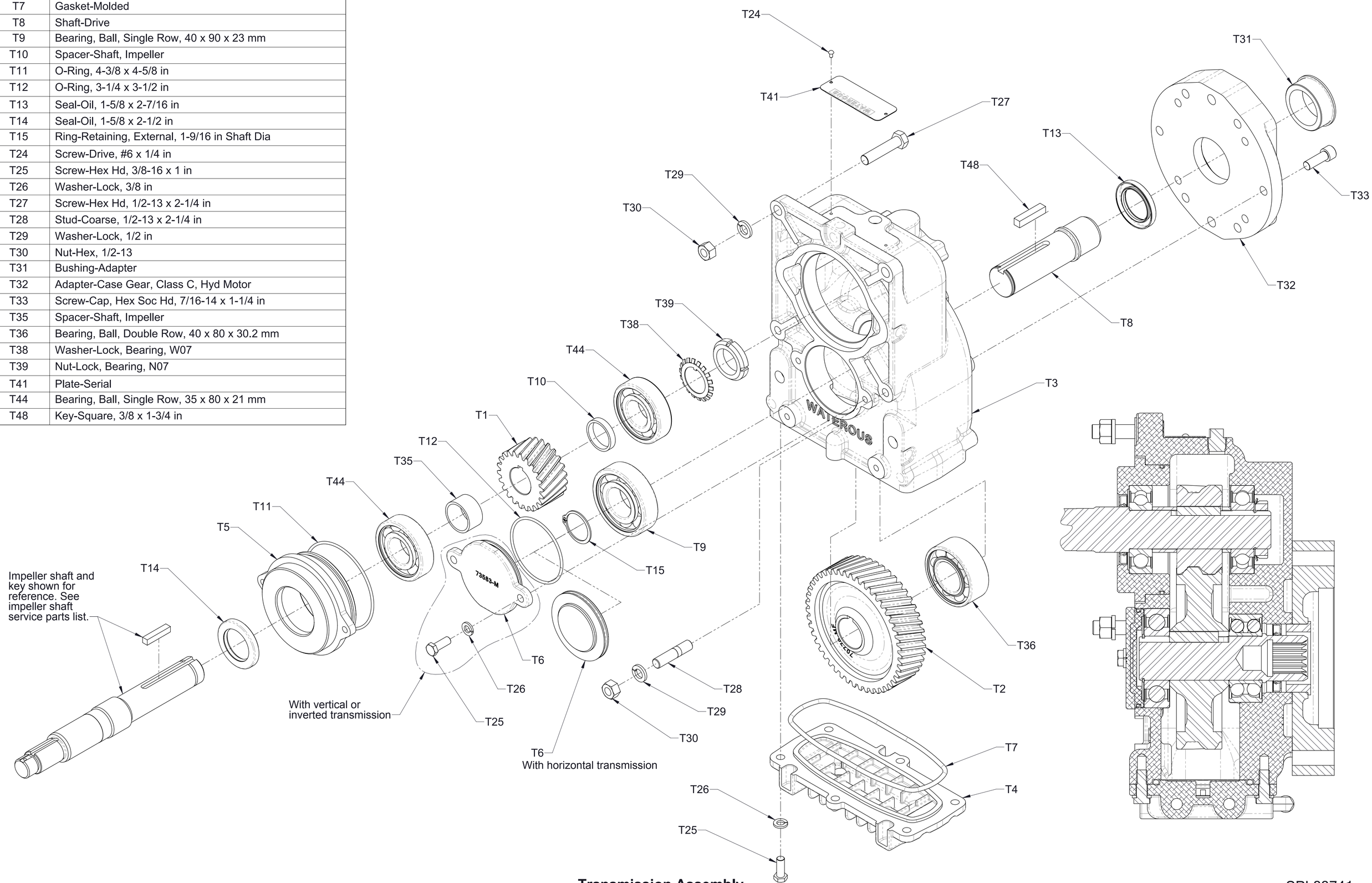

Transmission Assembly
One Piece Impeller Shaft, SAE Class C Hydraulic Adapter
Without Extended Shaft
CGV, CGVG, CGVR

Ref No.	Description
T1	Gear-Driven
T2	Gear-Drive
T3	Case-Transmission
T4	Pan-Oil, Cooler
T5	Housing-Bearing
T6	Cover-Bearing
T7	Gasket-Molded
T8	Shaft-Drive
T9	Bearing, Ball, Single Row, 40 x 90 x 23 mm
T10	Spacer-Shaft, Impeller
T11	O-Ring, 4-3/8 x 4-5/8 in
T12	O-Ring, 3-1/4 x 3-1/2 in
T13	Seal-Oil, 1-5/8 x 2-7/16 in
T14	Seal-Oil, 1-7/8 X 2-3/4
T15	Ring-Retaining, External, 1-9/16 in Shaft Dia
T19	2.83 ratio: Key-Rectangular, 1/4 x 5/16 x 1-9/16 in All other ratios: Key-Square, 5/16 x 1-9/16 in
T24	Screw-Drive, #6 x 1/4 in
T25	Screw-Hex Hd, 3/8-16 x 1 in
T26	Washer-Lock, 3/8 in
T27	Screw-Hex Hd, 1/2-13 x 2-1/4 in
T28	Stud-Coarse, 1/2-13 x 2-1/4 in
T29	Washer-Lock, 1/2 in
T30	Nut-Hex, 1/2-13
T34	Shaft-Driven
T36	Bearing, Ball, Double Row, 35 x 72 x 27 mm
T38	Washer-Lock, Bearing, W07
T39	Nut-Lock, Bearing, N07
T41	Plate-Serial
T44	Bearing, Ball, Single Row, 35 x 80 x 21 mm
T46	Sleeve-Seal, Oil
T47	Nut-Self Locking, 1-20 UNEF-2B
T48	Key-Square, 3/8 x 1-3/4 in
T49	Boot-Sealing

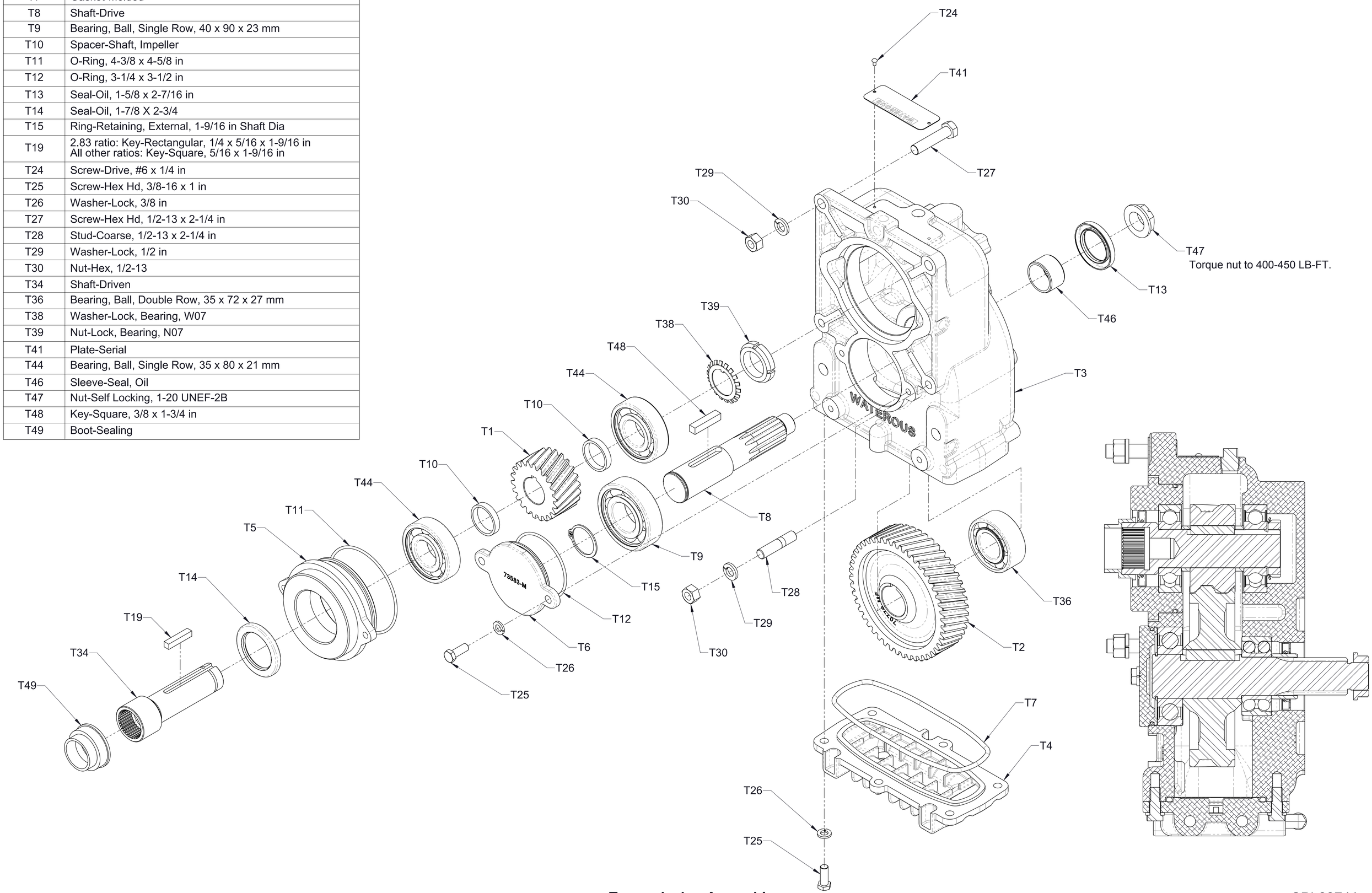

Transmission Assembly
Separable Impeller Shaft, 1-3/8in. SAE Splined Input
Without Extended Shaft
CM, CS

Ref No.	Description
T1	Gear-Driven
T2	Gear-Drive
T3	Case-Transmission
T4	Pan-Oil, Cooler
T5	Housing-Bearing
T6	Cover-Bearing
T7	Gasket-Molded
T8	Shaft-Drive
T9	Bearing, Ball, Single Row, 40 x 90 x 23 mm
T10	Spacer-Shaft, Impeller
T11	O-Ring, 4-3/8 x 4-5/8 in
T12	O-Ring, 3-1/4 x 3-1/2 in
T13	Seal-Oil, 1-5/8 x 2-7/16 in
T14	Seal-Oil, 1-7/8 X 2-3/4
T15	Ring-Retaining, External, 1-9/16 in Shaft Dia
T19	Key-Square, 5/16 x 1-9/16 in
T24	Screw-Drive, #6 x 1/4 in
T25	Screw-Hex Hd, 3/8-16 x 1 in
T26	Washer-Lock, 3/8 in
T27	Screw-Hex Hd, 1/2-13 x 2-1/4 in
T28	Stud-Coarse, 1/2-13 x 2-1/4 in
T29	Washer-Lock, 1/2 in
T30	Nut-Hex, 1/2-13
T34	Shaft-Driven
T36	Bearing, Ball, Double Row, 35 x 72 x 27 mm
T38	Washer-Lock, Bearing, W07
T39	Nut-Lock, Bearing, N07
T41	Plate-Serial
T44	Bearing, Ball, Single Row, 35 x 80 x 21 mm
T46	Sleeve-Seal, Oil
T47	Nut-Self Locking, 1-20 UNEF-2B
T48	Key-Square, 3/8 x 1-3/4 in
T51	Washer-Plain, 1/2 in
T52	O-Ring, 4-3/4 x 5 in
T55	Screw-Hex Hd, M10-1.5 x 20 mm
T56	Washer-Lock, 10 mm
T57	Bracket-Lifting

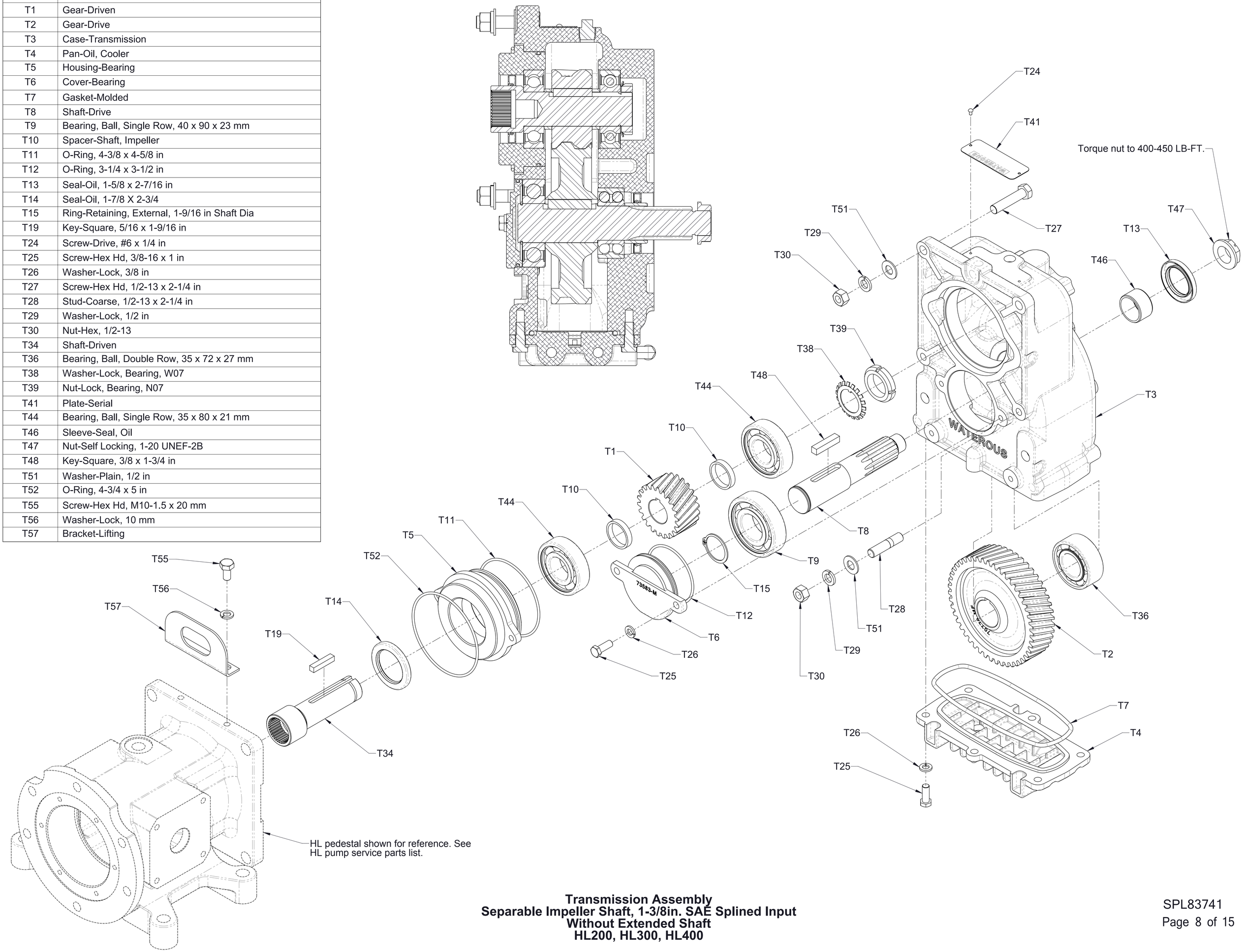

Transmission Assembly
Separable Impeller Shaft, 1-3/8in. SAE Splined Input
Without Extended Shaft
HL200, HL300, HL400

Ref No.	Description
T1	Gear-Driven
T2	Gear-Drive
T3	Case-Transmission
T4	Pan-Oil, Cooler
T5	Housing-Bearing
T6	Cover-Bearing
T7	Gasket-Molded
T8	Shaft-Drive, Extended
T9	Bearing, Ball, Single Row, 40 x 90 x 23 mm
T10	Spacer-Shaft, Impeller
T11	O-Ring, 4-3/8 x 4-5/8 in
T12	O-Ring, 3-1/4 x 3-1/2 in
T13	Seal-Oil, 1-5/8 x 2-7/16 in
T14	Seal-Oil, 1-7/8 X 2-3/4
T15	Ring-Retaining, External, 1-9/16 in Shaft Dia
T19	Key-Square, 5/16 x 1-9/16 in
T24	Screw-Drive, #6 x 1/4 in
T25	Screw-Hex Hd, 3/8-16 x 1 in
T26	Washer-Lock, 3/8 in
T27	Screw-Hex Hd, 1/2-13 x 4 in
T28	Stud-Coarse, 1/2-13 X 3 in
T29	Washer-Lock, 1/2 in
T30	Nut-Hex, 1/2-13
T34	Shaft-Driven, Extended
T35	Spacer-Shaft, Driven
T36	Bearing, Ball, Double Row, 35 x 72 x 27 mm
T37	Seal-Oil, 1-1/4 x 2 in
T38	Washer-Lock, Bearing, W07
T39	Nut-Lock, Bearing, N07
T41	Plate-Serial
T44	Bearing, Ball, Single Row, 35 x 80 x 21 mm
T45	Bearing, Ball, Double Row, 35 x 80 x 34.9 mm
T46	Sleeve-Seal, Oil
T47	Nut-Self Locking, 1-20 UNEF-2B
T48	Key-Square, 3/8 x 1-3/4 in
T50	Spacer-Shaft, Driven
T51	Washer-Plain, 1/2 in
T52	O-Ring, 4-3/4 x 5 in
T53	O-Ring, 4-1/4 x 4-1/2 in
T54	Plate-Adapter, Transmission

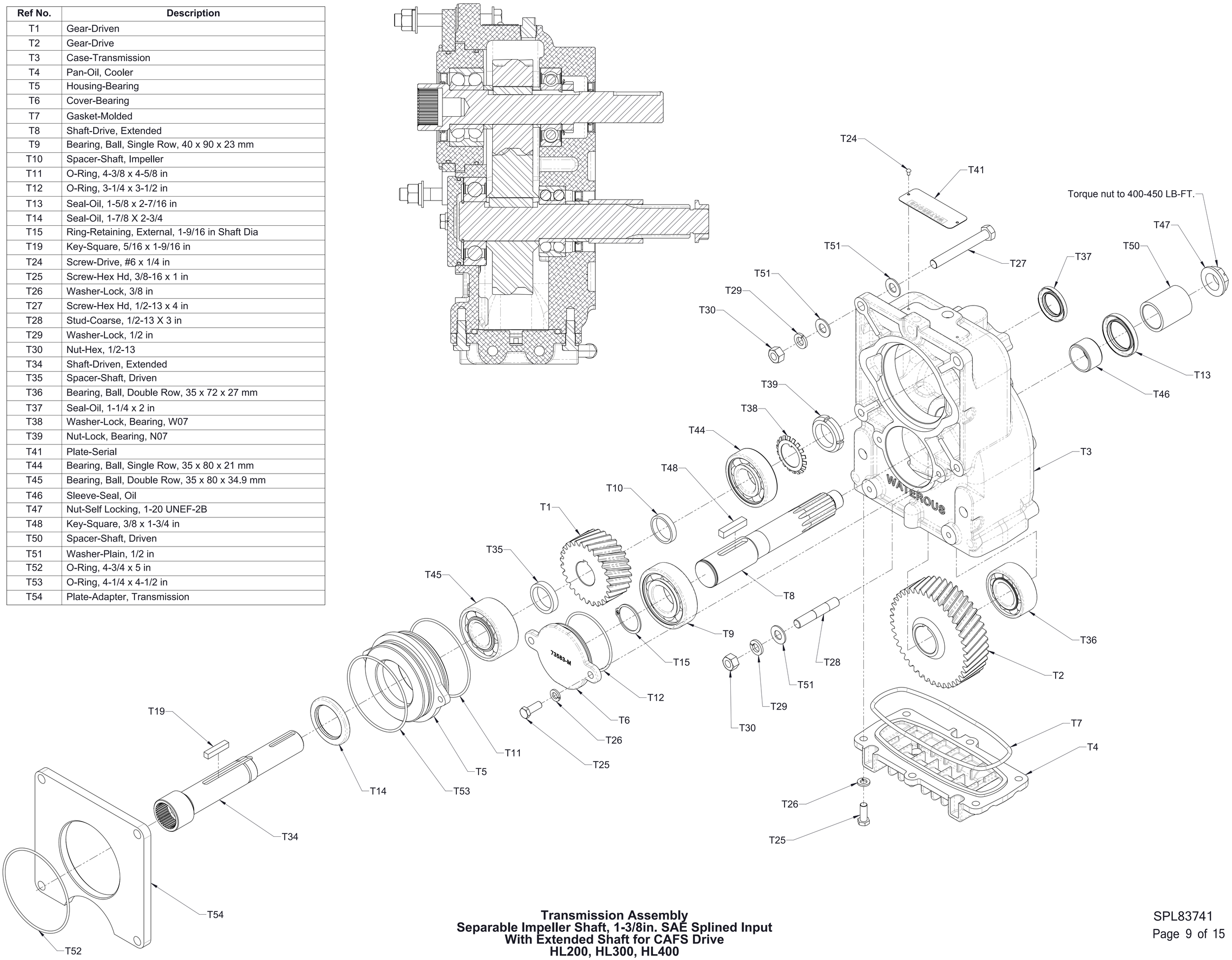

Transmission Assembly
Separable Impeller Shaft, 1-3/8in. SAE Splined Input
With Extended Shaft for CAFS Drive
HL200, HL300, HL400

Ref No.	Description
T43	Fitting-Elbow, 3/8 PTC x 1/4 MNPT, 90°
T91	Fitting-Elbow, 3/8 PTC X 3/8 MNPT, 90°
T92	Tubing, 3/8, Green

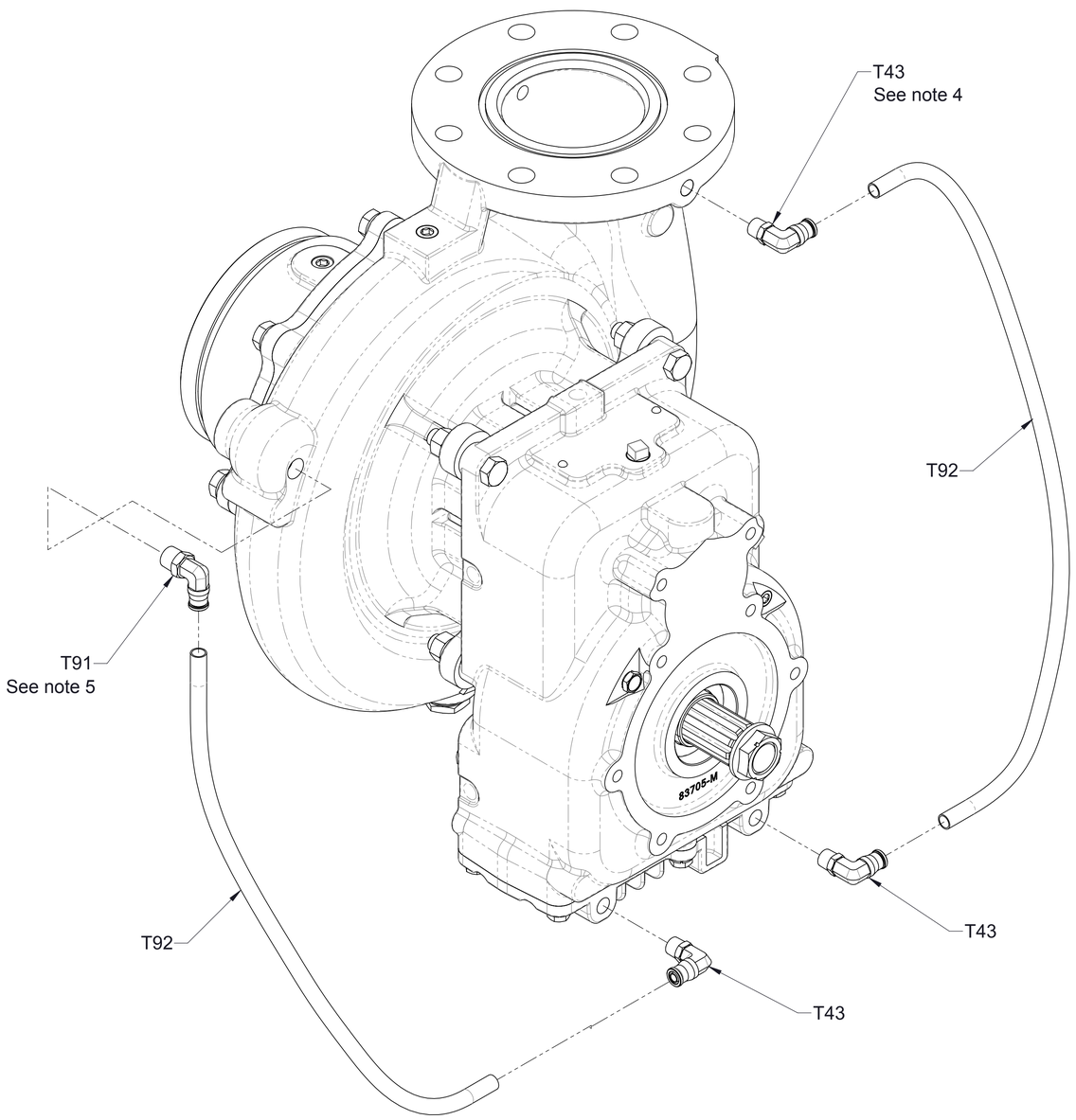

Notes:
1. CW input, vertical transmission, discharge UP shown.
2. Tubing to be cut to required length depending on input rotation and pump/transmission orientation.
3. Route hoses so water drains either through pump or oil cooler
4. Elbow on disharge flange may need to be mounted on opposite side of flange if there is interferance with the transmission in certain configurations.
5. Prior to July 22, 2020 T91 elbow was T89 3/8 PTC x 3/8 NPT straight adapter.

Oil Cooler Lines and Fittings
CXN, CXS, CXV

Ref No.	Description
T43	Fitting-Elbow, 3/8 PTC x 1/4 MNPT, 90°
T91	Fitting-Elbow, 3/8 PTC X 3/8 MNPT, 90°
T92	Tubing, 3/8, Green

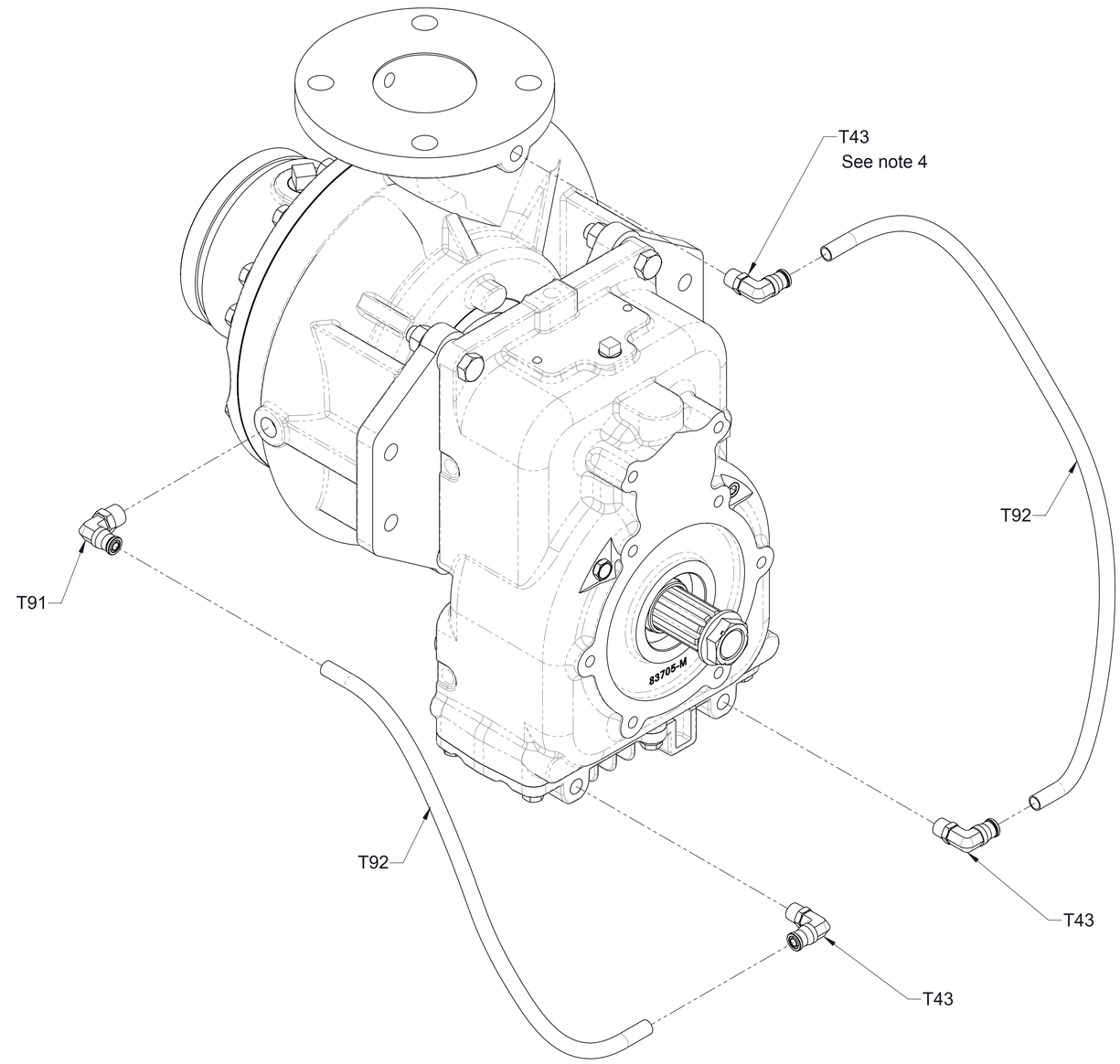

Notes:
1. CW input, vertical transmission, discharge UP shown.
2. Tubing to be cut to required length depending on input rotation and pump/transmission orientation.
3. Route hoses so water drains either through pump or oil cooler
4. Elbow on disharge flange may be mounted on opposite side of flange if it provides a better hose route depending on the pump and transmission configurations.

Oil Cooler Lines and Fittings
CGV, CGVG, CGVR

Ref No.	Description
T43	Fitting-Elbow, 3/8 PTC x 1/4 MNPT, 90°
T88	Adapter-3/8 PTC x 1/4 MNPT
T90	Adapter-Straight 3/8 PTC x 1/2 MNPT
T92	Tubing, 3/8, Green
T94	Bushing-Reducing, 1 MNPT x 1/4 FNPT

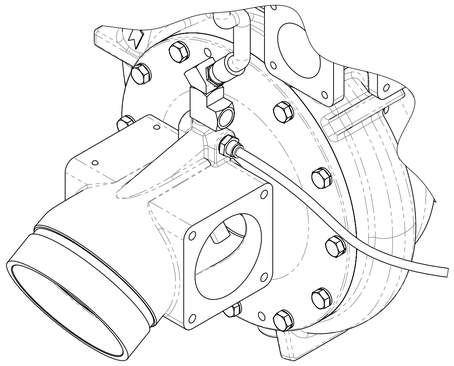

Hose to Intake Connection Detail

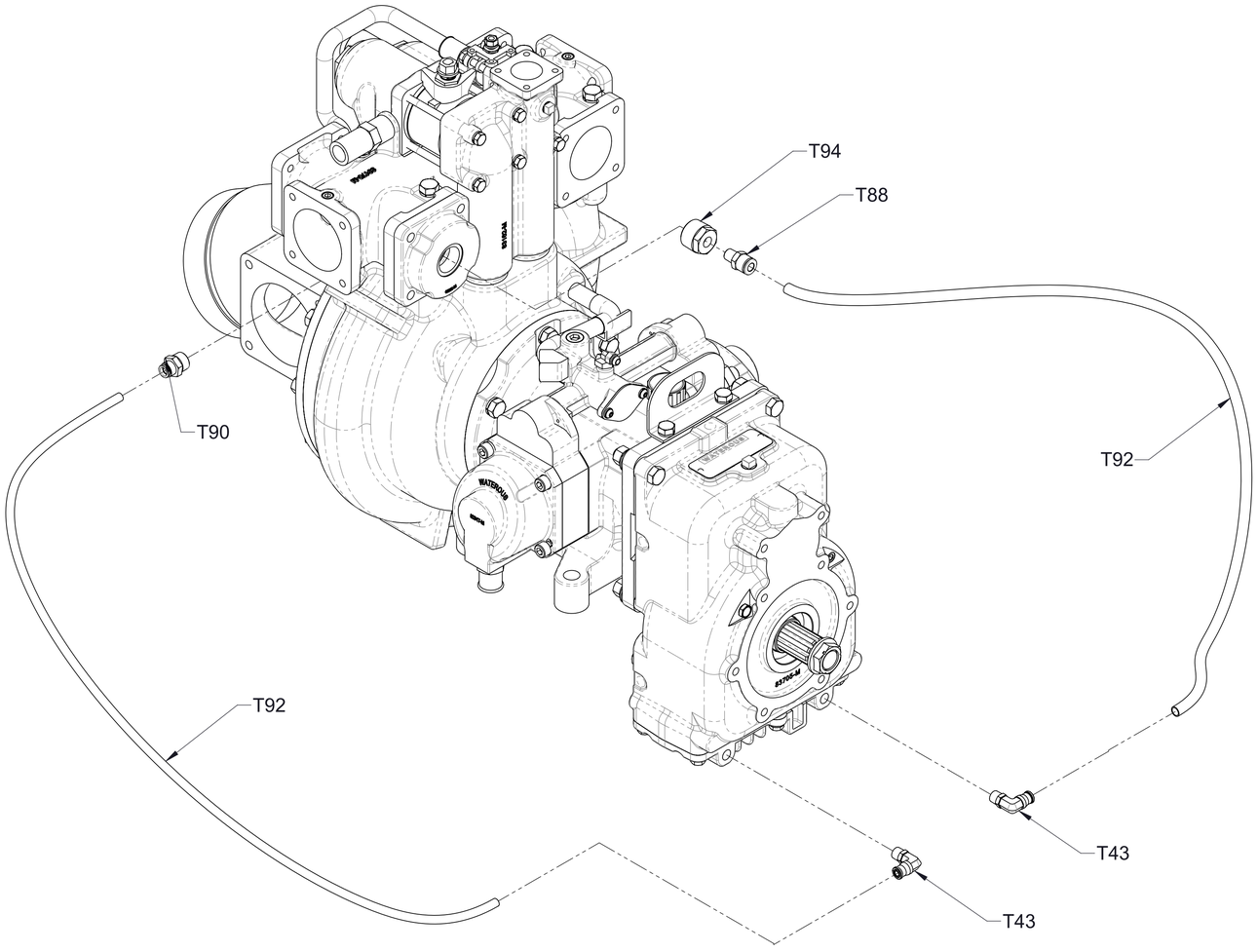

Notes:
1. CW input and vertical transmission shown.
2. Tubing to be cut to required length depending on input rotation and transmission orientation.
3. Route hoses so water drains either through pump or oil cooler
4. Cooler lines feeding into oil cooler may be swapped for a better hose routing in certain configurations.

Oil Cooler Lines and Fittings
HL200, HL300, HL400, HLU

Ref No.	Description
T43	Fitting-Elbow, 3/8 PTC x 1/4 MNPT, 90°
T88	Adapter-3/8 PTC x 1/4 MNPT
T90	Adapter-Straight 3/8 PTC x 1/2 MNPT
T92	Tube-Air Brake
T94	Bushing-Reducing, 1 MNPT x 1/4 FNPT
T95	Nipple 8x3in
T96	COUPLING-PIPE, 1/2 FNPT
T97	ELBOW-STREET, 45° X 1/2 NPT

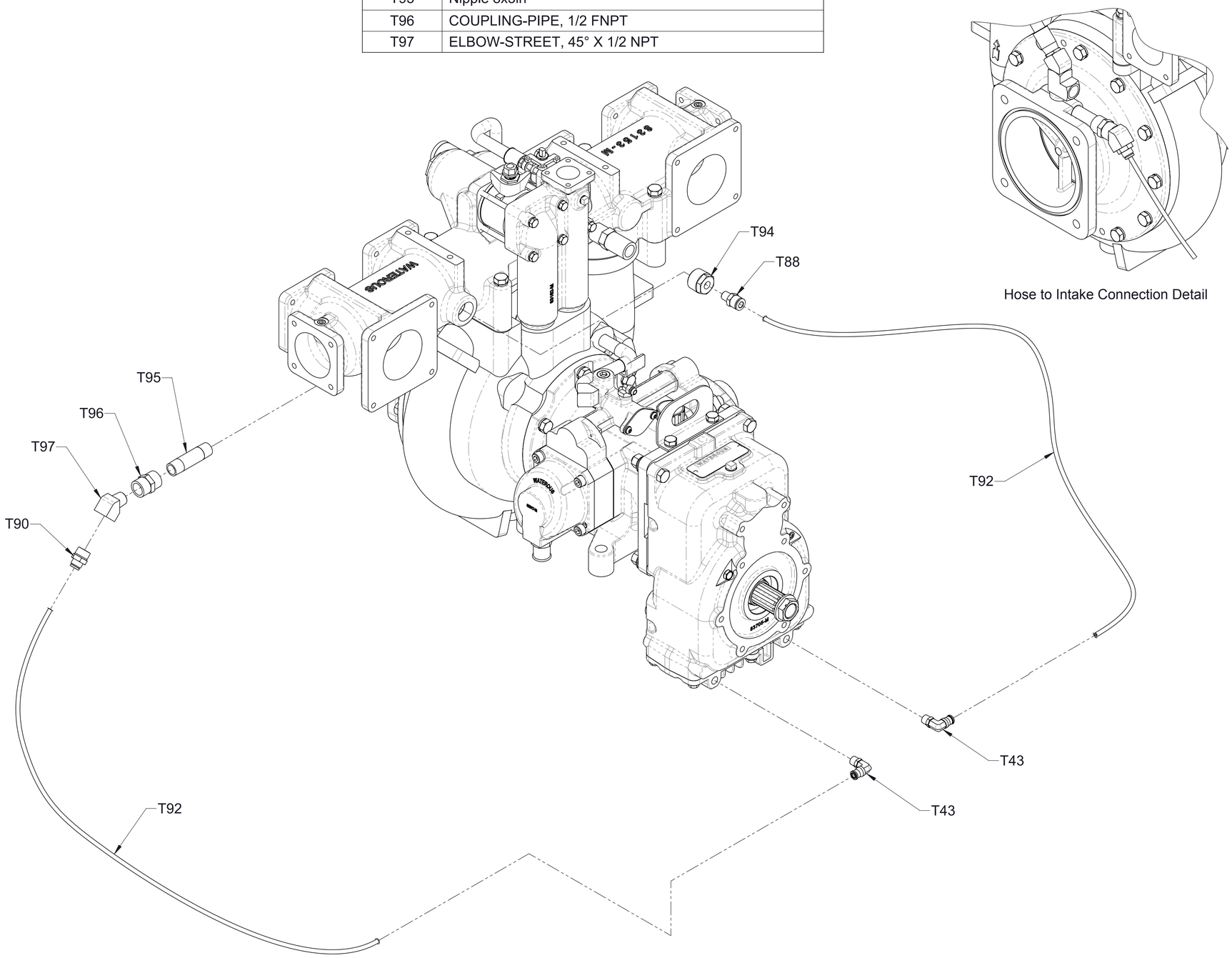

Notes:
1. CW input and vertical transmission shown.
2. Tubing to be cut to required length depending on input rotation and transmission orientation.
3. Route hoses so water drains either through pump or oil cooler
4. Cooler lines feeding into oil cooler may be swapped for a better hose routing in certain configurations.

Oil Cooler Lines and Fittings
HL400 with Short Intake Fitting

Ref No.	Description
T43	Fitting-Elbow, 3/8 PTC x 1/4 MNPT, 90°
T88	Adapter-3/8 PTC x 1/4 MNPT
T92	Tubing, 3/8, Green

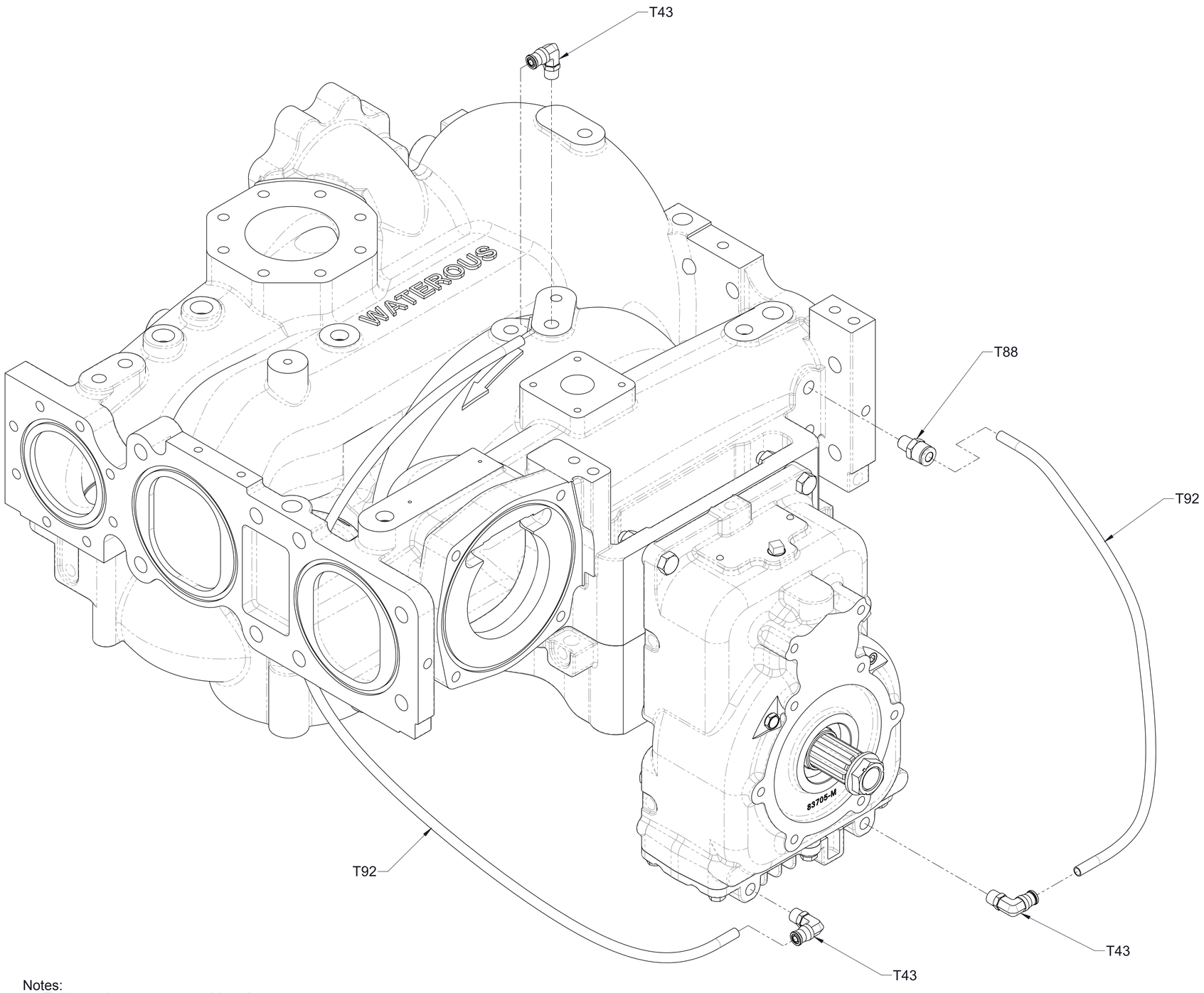

Notes:
1. Tubing to be cut to required length.
2. Route hoses so water drains either through pump or oil cooler

Oil Cooler Lines and Fittings
CM, CS

Ref No.	Description
T20	Breather, 1/4 NPT
T21	Plug-Level, Oil, 3/8
T22	Plug-Drain, Magnetic, 3/8, Headless
T23	Plug-Pipe, Square Hd, 3/8 NPT
T40	Plug-Pipe, Headless, 1/4 NPT
T42	Plug-Pipe, Headless, 1/4 NPT
T43	Fitting-Elbow, 3/8 PTC x 1/4 MNPT, 90°

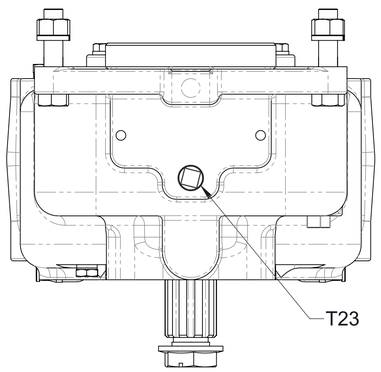

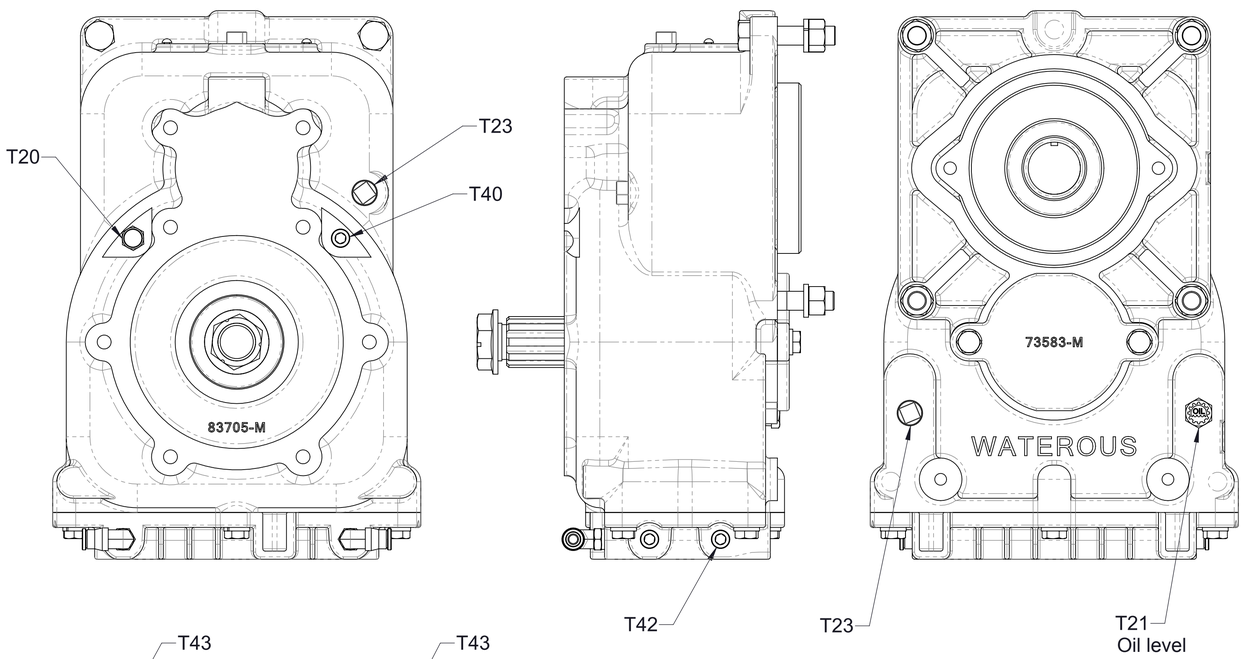

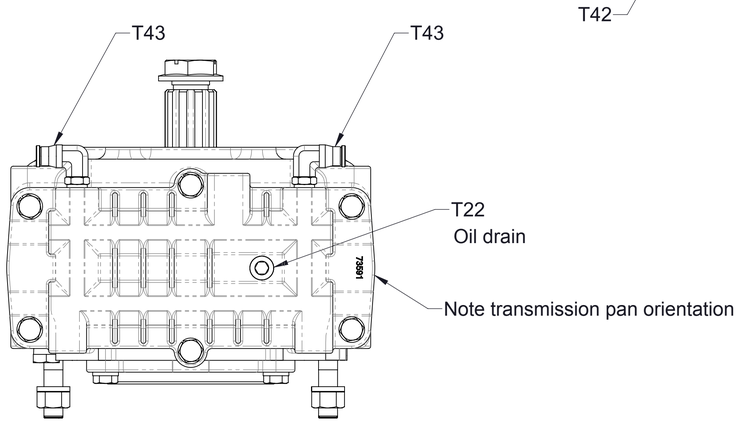

Vertical

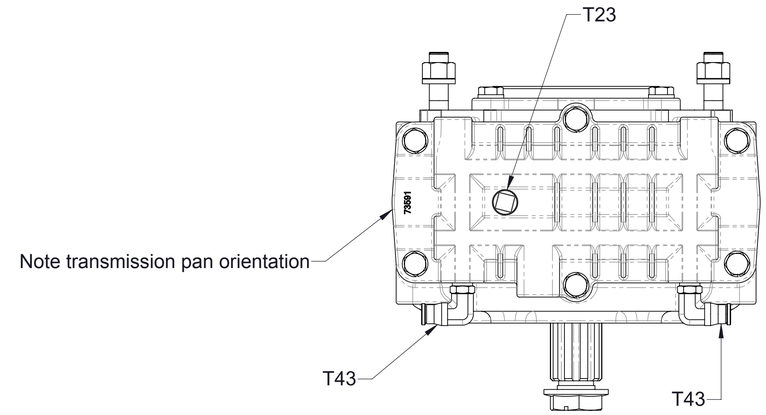

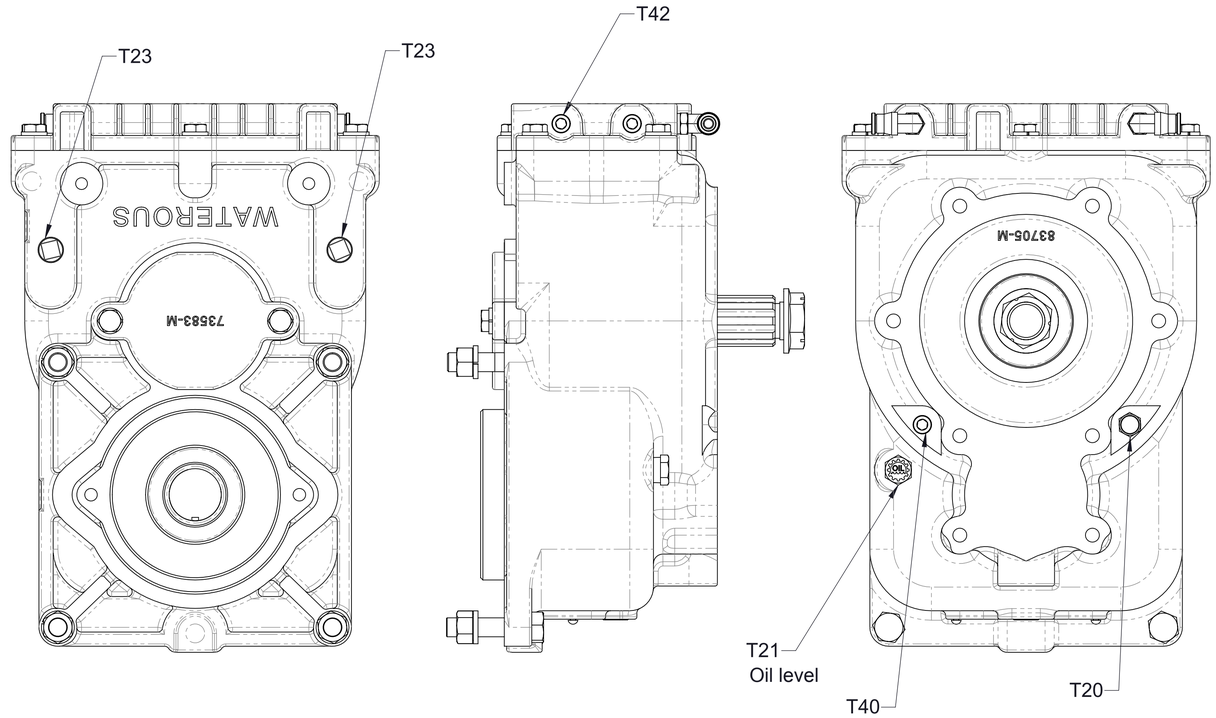

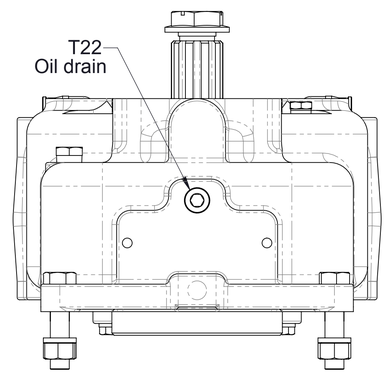

Inverted

Breather, Drain, Oil Level, Plug, and Cooler Elbow Locations
Vertical and Inverted Mounting Positions

Ref No.	Description
T20	Breather, 1/4 NPT
T21	Plug-Level, Oil, 3/8
T22	Plug-Drain, Magnetic, 3/8, Headless
T23	Plug-Pipe, Square Hd, 3/8 NPT
T40	Plug-Pipe, Headless, 1/4 NPT
T42	Plug-Pipe, Headless, 1/4 NPT
T43	Fitting-Elbow, 3/8 PTC x 1/4 MNPT, 90°

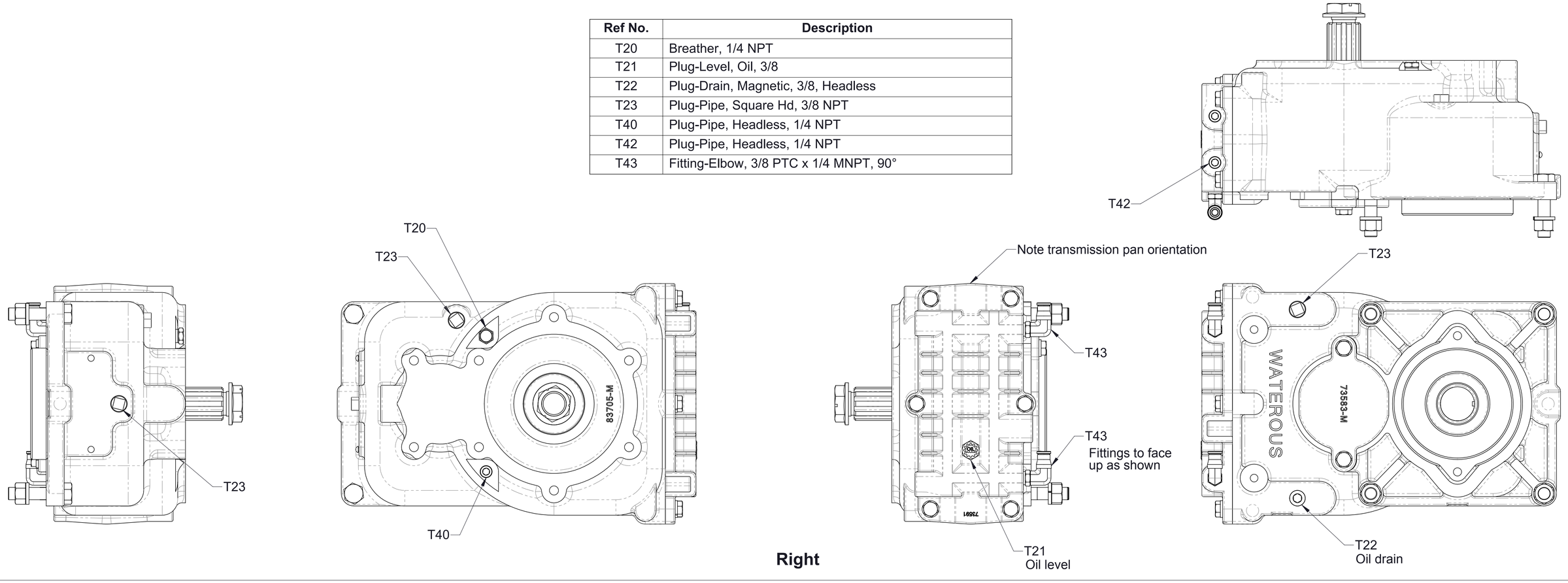

Ref No.	Description
T20	Breather, 1/4 NPT
T21	Plug-Level, Oil, 3/8
T22	Plug-Drain, Magnetic, 3/8, Headless
T23	Plug-Pipe, Square Hd, 3/8 NPT
T40	Plug-Pipe, Headless, 1/4 NPT
T42	Plug-Pipe, Headless, 1/4 NPT
T43	Fitting-Elbow, 3/8 PTC x 1/4 MNPT, 90°

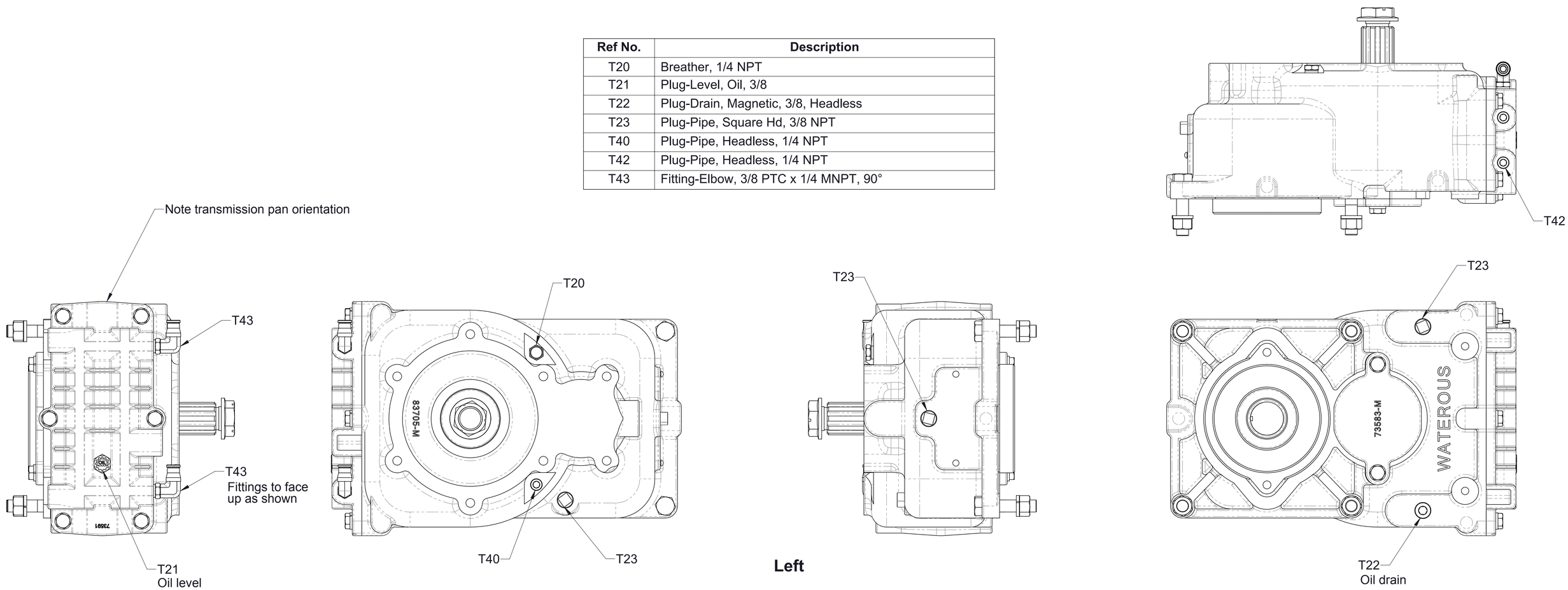

Breather, Drain, Oil Level, Plug, and Cooler Elbow Locations
Vertical and Inverted Mounting Positions